SIDBURY FARMS - PHASE 1

NEW HANOVER COUNTY, NC

MAY 27, 2020

TRC SUBMITTAL

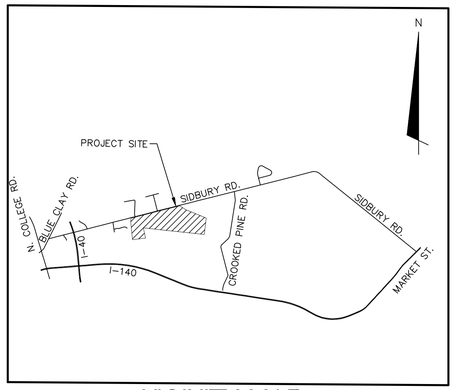

VICINITY MAP

NOT TO SCALE

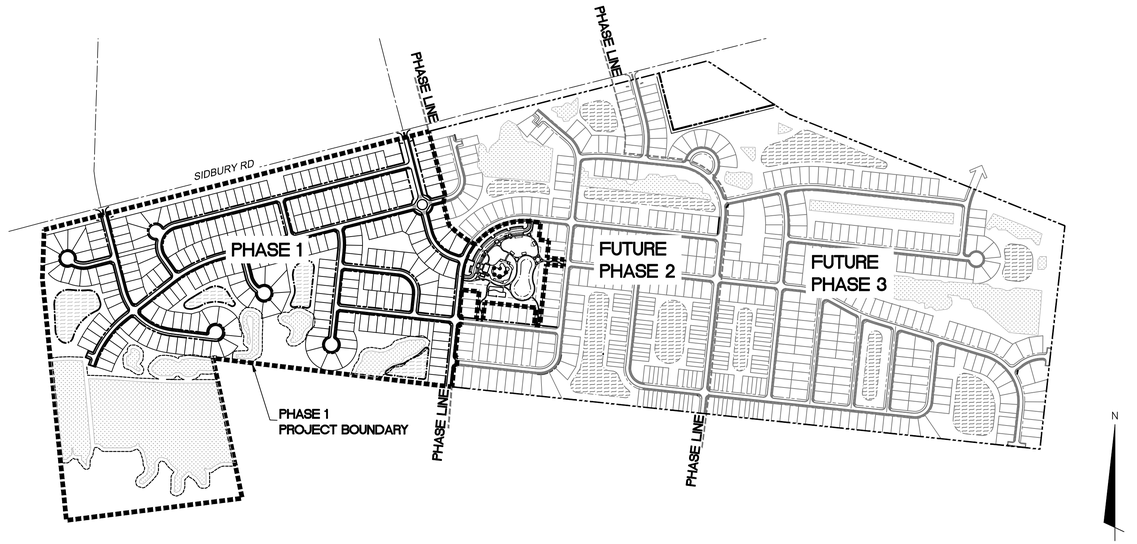

VICINITY MAP

1"=500'

COUNTY AND AGENCY CONTACTS

A. New Hanover County Planning
Planning and Land Use
230 Government Center Drive, Suite 110
Wilmington, NC 28403
(910)798-7165

B. New Hanover County Engineering
230 Government Center Drive, Suite 160
Wilmington, NC 28402-1810
(910) 798-7051

C. New Hanover County
Sediment and Erosion Control
230 Government Center Drive, Suite 160
Wilmington, NC 28403
(910) 798-7432

D. Cape Fear Public Utility Authority
235 Government Center Drive
Wilmington, NC 28403
(910) 332-6626

PROJECT DATA

NAME OF PROJECT:
SIDBURY FARMS
NEW HANOVER COUNTY, NORTH CAROLINA

OWNER:
RMP SIDBURY ROAD LLC
CHARLOTTE, NC 28205

DEVELOPER:
D.R. HORTON
131 RACINE DRIVE, SUITE 201
WILMINGTON, NC 28403
CONTACT: IAN FLANNERY

PREPARED BY:
MCKIM & CREED, INC
243 NORTH FRONT ST
WILMINGTON, NC 28401
PHONE: (910)343-1048
FAX: (910)251-8282
CONTACT: RICHARD A. MOORE, PE
EMAIL: RAMOORE@MCKIMCREED.COM

Sheet Number	Sheet Title	Sheet Description
1	G-001	COVER
2	G-002	GENERAL NOTES
3	G-003	ROADWAY CLASSIFICATIONS
4	G-004	TYPICAL STREET SECTIONS
5	G-005	LOT AND STREET TYPICALS
6	CX-101	EXISTING CONDITIONS
7	CX-102	EXISTING CONDITIONS
8	CX-103	EXISTING CONDITIONS
9	CX-104	TREE REMOVAL PLAN
10	CE-100	OVERALL EROSION AND SEDIMENT CONTROL PLAN – PHASE 1
11	CE-101	ENLARGED EROSION AND SEDIMENT CONTROL PLAN – PHASE 1
12	CE-102	ENLARGED EROSION AND SEDIMENT CONTROL PLAN – PHASE 1
13	CE-103	ENLARGED SEDIMENT AND EROSION CONTROL PLAN – PHASE 1
14	CE-104	OVERALL EROSION AND SEDIMENT CONTROL PLAN – PHASE 2
15	CE-105	ENLARGED EROSION AND SEDIMENT CONTROL PLAN – PHASE 2
16	CE-106	ENLARGED EROSION AND SEDIMENT CONTROL PLAN – PHASE 2
17	CE-107	ENLARGED EROSION AND SEDIMENT CONTROL PLAN – PHASE 2
18	CS-100	OVERALL SITE PLAN
19	CS-101	ENLARGED SITE PLAN
20	CS-102	ENLARGED SITE PLAN
21	CS-103	ENLARGED SITE PLAN
22	CS-104	CURVE TABLE DATA
23	CG-100	OVERALL GRADING AND STORMWATER PLAN
24	CG-101	ENLARGED GRADING AND STORMWATER PLAN
25	CG-102	ENLARGED GRADING AND STORMWATER PLAN
26	CG-103	ENLARGED GRADING AND STORMWATER PLAN
27	CU-100	OVERALL UTILITY PLAN
28	CU-101	ENLARGED UTILITY PLAN
29	CU-102	ENLARGED UTILITY PLAN
30	CU-103	ENLARGED UTILITY PLAN
31	CU-701	PLAN AND PROFILE ROAD A STA: 10+00 TO END
32	CU-702	PLAN AND PROFILE ROAD B STA: 10+00 TO 26+50
33	CU-703	PLAN AND PROFILE ROAD B STA: 26+50 TO END ROAD C STA: 10+00 TO 15+50
34	CU-704	PLAN AND PROFILE ROAD C STA 16+00 TO END
35	CU-705	PLAN AND PROFILE ROAD D STA 10+00 TO END ROAD E STA 10+00 TO END
36	CU-706	PLAN AND PROFILE ROAD F STA 10+00 TO END ROAD G STA 10+00 TO END
37	CU-707	PLAN AND PROFILE ROAD H STA: 10+00 TO END
38	CU-708	PLAN AND PROFILE ROAD I STA: 10+00 TO END
39	CU-709	PLAN AND PROFILE ROAD J STA: 10+00 TO END
40	CU-710	PLAN AND PROFILE ROAD K STA: 10+00 TO END ROAD L STA: 10+00 TO END
41	CL-100	OVERALL LANDSCAPE PLAN
42	CL-101	ENLARGED LANDSCAPE PLAN
43	CL-102	ENLARGED LANDSCAPE PLAN
44	CL-103	ENLARGED LANDSCAPE PLAN
45	CS-501	SITE DETAILS
46	CE-501	EROSION CONTROL DETAILS
47	CE-502	EROSION CONTROL DETAILS
48	CE-503	EROSION CONTROL DETAILS
49	CG-501	STORM DRAINAGE DETAILS
50	CG-502	STORM DRAINAGE DETAILS
51	CG-503	STORM DRAINAGE DETAILS
52	CG-504	STORM DRAINAGE DETAILS
53	CU-501	CFPUA DETAILS
54	CU-502	CFPUA DETAILS
55	CU-503	CFPUA DETAILS
56	CU-504	CFPUA DETAILS
57	CU-505	CFPUA DETAILS
58	CU-506	CFPUA DETAILS
59	CL-501	LANDSCAPE DETAILS
60	CN-501	STORMWATER POND 1 DETAILS
61	CN-502	STORMWATER POND 2 DETAILS
62	CN-503	STORMWATER POND 3 DETAILS
63	CN-504	STORMWATER POND 4 DETAILS

D·R·HORTON® DHI Listed NYSE
America's Builder
131 Racine Drive, Suite 201
Wilmington, North Carolina 28403
Phone: (843) 709-0752

McKIM & CREED
243 North Front Street
Wilmington, North Carolina 28401
Phone: (910)343-1048 , Fax: (910)251-8282
License: F-1222
www.mckimcreed.com

NORTH CAROLINA PROFESSIONAL ENGINEER SEAL 025503 RICHARD A. MOORE
5/27/2020

811 Know what's below. Call before you dig.

SIDBURY FARMS - PHASE 1

04245-0012

MAY 2020

CONSTRUCTION NOTES

1. CONSTRUCTION AND MATERIALS SHALL BE IN ACCORDANCE WITH THE NEW HANOVER COUNTY STANDARDS AND SPECIFICATIONS.
2. CONTRACTOR IS FULLY RESPONSIBLE FOR ACQUIRING THE LOCATION OF EXISTING UTILITIES FROM THE APPROPRIATE PARTIES PRIOR TO CONSTRUCTION.
3. CONTRACTOR IS RESPONSIBLE FOR PLACING BARRICADES, USING FLAGMEN, ETC. AS NECESSARY TO ENSURE SAFETY TO THE PUBLIC.
4. THESE DRAWINGS SHOW INFORMATION OBTAINED FROM THE AVAILABLE RECORDS REGARDING PIPES, CONDUITS, TELEPHONE LINES, AND OTHER STRUCTURES AND CONDITIONS WHICH EXIST ALONG THE LINES OF WORK AND BELOW THE SURFACE OF THE GROUND. THE OWNER AND ENGINEER DISCLAIM ANY RESPONSIBILITIES FOR THE ACCURACY OR COMPLETENESS OF SAID INFORMATION, AND SUCH INFORMATION IS BEING SHOWN ONLY FOR THE CONVENIENCE OF THE CONTRACTOR WHO MUST VERIFY THE INFORMATION TO HIS OWN SATISFACTION DURING THE BIDDING AND CONSTRUCTION PHASES. IF THE CONTRACTOR RELIES ON SAID INFORMATION, HE DOES SO AT HIS OWN RISK. THE GIVING OF THE INFORMATION ON THE CONTRACT DRAWINGS WILL NOT RELIEVE THE CONTRACTOR OF HIS OBLIGATIONS TO SUPPORT AND PROTECT ALL PIPES, CONDUITS, TELEPHONE LINES, AND OTHER STRUCTURES, WHETHER ABOVE OR BELOW GRADE.
5. SHOULD ANY DAMAGE OCCUR TO EXISTING UTILITIES, IT SHALL BE REPAIRED SOLELY AT THE CONTRACTOR'S EXPENSE.
6. THE CONTRACTOR SHALL VERIFY EXISTING INVERTS PRIOR TO CONSTRUCTION OF UNDERGROUND UTILITIES. TEST PITTING OF EXISTING LINES PRIOR TO CONSTRUCTION, IF NECESSARY, SHALL BE COORDINATED WITH THE OWNER.
7. ALL MATERIALS AND METHODS OF CONSTRUCTION SHALL CONFORM TO THE DRAWINGS, PROJECT SPECIFICATIONS, AND LOCAL BUILDING CODES.
8. ALL DISTURBED AREAS SHALL BE SMOOTHLY GRADED TO PROMOTE POSITIVE DRAINAGE AND STABILIZED WITH TOPSOIL, SEED, AND MULCH. IF SETTLEMENT OCCURS, TOPSOIL, SEEDING, AND MULCH SHALL BE REPEATED UNTIL SETTLEMENT SUBSIDES. (SEE EROSION AND SEDIMENT CONTROL DETAILS AND SPECIFICATIONS.)
9. WATER MAINS WILL BE INSTALLED AT A DEPTH THAT WILL PROVIDE 36" COVER OVER THE PIPES BELOW PROPOSED GRADE UNLESS SHOWN OTHERWISE ON THESE PLANS OR DIRECTED OTHERWISE BY THE ENGINEER.
10. ALL WATER VALVES, BOXES, AND FIRE HYDRANT ASSEMBLES SHALL BE SET AND ADJUSTED TO FINISHED GRADE.
11. THE OWNER IS RESPONSIBLE FOR THE ACQUISITION OF ALL EASEMENTS, BOTH TEMPORARY AND PERMANENT.
12. THE CONTRACTOR SHALL VERIFY HORIZONTAL AND VERTICAL SURVEY CONTROL PRIOR TO STAKING OUT CONSTRUCTION. ANY DISCREPANCIES SHALL BE BROUGHT TO THE ATTENTION OF THE ENGINEER PRIOR TO PROCEEDING WITH WORK.
13. ANY PROPERTY LINE MONUMENTATION DISTURBED DURING CONSTRUCTION SHALL BE REPLACED SOLELY AT THE CONTRACTOR'S EXPENSE.
14. THE CONTRACTOR ASSUMES ALL RESPONSIBILITY FOR ANY DEVIATION FROM THESE PLANS.
15. FIRE HYDRANTS SHALL BE PLACED A MINIMUM DISTANCE OF 6 FEET FROM BACK OF CURB AND SHALL HAVE A CLEAR SPACE OF 3 FEET FROM ANY PERMANENT STRUCTURE PER CFPUA STANDARDS.
16. ALL SELECT AND BORROW MATERIAL SHALL MEET CRITERIA SET FORTH BY SECTIONS 1016 AND 1018 OF THE NORTH CAROLINA DEPARTMENT OF TRANSPORTATION'S STANDARDS AND SPECIFICATIONS FOR ROADS AND STRUCTURES. SEE SECTION FOR PLACEMENT AND COMPACTION INFORMATION.
17. THE ENGINEER AND THE CONTRACTOR SHALL INSPECT ALL EXISTING PIPES USED IN THE FINAL DRAINAGE SYSTEM AND AGREE ON THE CONDITION OF THE PIPES PRIOR TO CONSTRUCTION. IF DAMAGE OCCURS TO THESE PIPES DURING CONSTRUCTION, THE CONTRACTOR SHALL BE RESPONSIBLE FOR THE REPAIR OR REPLACEMENT OF THE PIPE(S).
18. EXISTING PAVING, CONCRETE, AND OTHER UNSUITABLE MATERIALS INCLUDING UNDERCUT EXCAVATION SHALL NOT BE USED AS FILL MATERIAL AND SHALL BE DISPOSED OF OUTSIDE THE PROJECT LIMITS AT THE CONTRACTOR'S EXPENSE. THE CONTRACTOR IS RESPONSIBLE FOR ALL PERMITTING AND FEES FOR DISPOSAL.
19. ALL TREES, STUMPS, ROOT MAT, ETC. SHALL BE ENTIRELY REMOVED REGARDLESS OF DEPTH. BURIAL OF ORGANIC MATERIAL WITHIN THE PROJECT LIMITS IS NOT PERMITTED. OPEN BURNING OF DOWNED TREES AND STUMPS IS NOT PERMITTED. CHIPPED MATERIALS MUST BE REMOVED PRIOR TO THE PLACEMENT OF EMBANKMENT OR TOPSOIL.
20. THE CONTRACTOR IS SOLELY RESPONSIBLE TO OBTAIN OFF-SITE SPOIL AREAS FOR DISPOSAL OF EXCESS AND/OR UNSUITABLE MATERIALS AS NECESSARY. OFF-SITE SPOIL AREAS MUST BE SUBMITTED TO THE ENGINEER AND APPLICABLE REGULATORY AGENCIES PRIOR TO UTILIZATION BY THE CONTRACTOR. NO AREAS DESIGNATED AS WETLANDS WILL BE PERMITTED FOR USE AS A DISPOSAL SITE. THE CONTRACTOR SHALL SUBMIT DOCUMENTATION TO THE ENGINEER THAT NO WETLANDS WILL BE IMPACTED. THE ENGINEER WILL NOT CONSIDER ANY DELAYS OR MONETARY CLAIMS OF ANY NATURE RESULTING FROM THE CONTRACTOR'S FAILURE OR DIFFICULTY IN FINDING NECESSARY DISPOSAL SITES TO MEET THE TIME FRAMES AND CAPACITIES REQUIRED. THE CONTRACTOR SHALL BE RESPONSIBLE FOR ALL PLANS, PERMITS, EROSION AND SEDIMENT CONTROL MEASURES, ETC. REQUIRED BY THE APPROPRIATE REGULATORY AGENCIES FOR UTILIZING OFF-SITE SPOIL AREAS. THE CONTRACTOR SHALL CERTIFY TO THE ENGINEER THAT ALL REQUIRED PERMITS HAVE BEEN OBTAINED PRIOR TO UTILIZING THE OFF-SITE SPOIL AREAS. ALL COSTS FOR PROCURING AND UTILIZING THE OFF-SITE SPOIL AREAS ARE TO BE INCIDENTAL TO THE BASE BID.

DEMOLITION NOTES

1. THE CONTRACTOR SHALL VISIT THE SITE TO BECOME FAMILIARIZED WITH FIELD DEMOLITION CONDITIONS.
2. THE CONTRACTOR IS RESPONSIBLE FOR THE PROPER DISPOSAL OF ALL DEMOLISHED DEBRIS ASSOCIATED WITH THE PROJECT IN ACCORDANCE WITH THE PROJECT SPECIFICATIONS.
3. THE CONTRACTOR IS RESPONSIBLE FOR CONTROLLING DUST GENERATED BY THE WORK, INCLUDING BUT NOT LIMITED TO DEMOLITION AND CONSTRUCTION ACTIVITIES, SITE VEHICULAR TRAFFIC AND RELATED OPERATIONS.
4. THE CONTRACTOR IS RESPONSIBLE FOR HAVING ALL EXISTING UTILITIES LOCATED PRIOR TO BEGINNING ANY DEMOLITION. CONTRACTOR SHALL CONTACT NC ONE CALL AT LEAST 72 HOURS PRIOR TO BEGINNING CONSTRUCTION OR EXCAVATION TO HAVE EXISTING UTILITIES LOCATED.
5. EXISTING UTILITIES AND STRUCTURES SHOWN, BOTH UNDERGROUND AND ABOVE GROUND, ARE BASED ON FIELD SURVEY AND THE BEST AVAILABLE RECORD DRAWINGS. THE CONTRACTOR SHALL VERIFY FIELD CONDITIONS PRIOR TO BEGINNING RELATED CONSTRUCTION. ANY DISCREPANCIES SHALL BE REPORTED TO THE OWNER'S REPRESENTATIVE AND ENGINEER IMMEDIATELY.
6. THE CONTRACTOR IS RESPONSIBLE FOR THE COORDINATION OF DISCONNECTING AND ABANDONING ALL EXISTING UTILITIES WITH THE OWNER UNLESS OTHERWISE NOTED. ALL EXISTING UTILITIES AND ASSOCIATED PIPING, ETC. NOT IN USE ON THE SITE SHALL BE PROPERLY ABANDONED AND REMOVED AS REQUIRED. COORDINATE WITH THE OWNER.
7. THE CONTRACTOR IS RESPONSIBLE FOR THE PROTECTION OF ANY EXISTING UTILITIES THAT REMAIN IN SERVICE DURING DEMOLITION.
8. THE CONTRACTOR IS RESPONSIBLE FOR STABILIZATION OF ALL DISTURBED AREAS AND SLOPES ON AND OFF SITE IN ACCORDANCE WITH THE EROSION CONTROL MEASURES SPECIFIED ON THE PLANS AND IN THE SPECIFICATIONS. THE CONTRACTOR SHALL COORDINATE WITH THE OWNER TO DETERMINE WHO IS RESPONSIBLE FOR PROVIDING THE PERMANENT STABILIZATION MEASURES AND THE TYPE OF PERMANENT MEASURES PRIOR TO BEGINNING DEMOLITION AND CONSTRUCTION. THE PERMANENT STABILIZATION MEASURES SHALL BE IN PLACE AND ACCEPTABLE TO THE OWNER'S REPRESENTATIVE AND ENGINEER PRIOR TO PROJECT CLOSEOUT. COORDINATE INSPECTION WITH THE OWNER AND ENGINEER PRIOR TO PROJECT CLOSEOUT.
9. THE CONTRACTOR IS RESPONSIBLE FOR COORDINATING AND CONTACTING THE ENGINEER FOR THE REQUIRED INSPECTIONS ON THE PROJECT.
10. WETLANDS DO EXIST ON SITE. WETLANDS WILL NOT BE DISTURBED DURING CONSTRUCTION OF THIS PROJECT.

CONSTRUCTION SEQUENCE:

1. OBTAIN ALL NECESSARY PERMIT APPROVALS PRIOR TO ANY LAND DISTURBING ACTIVITY.
2. HOLD A PRE-CONSTRUCTION MEETING WITH THE EROSION CONTROL INSPECTOR.
3. INSTALL GRAVEL CONSTRUCTION ENTRANCE, COMMENCE CLEARING AND ROUGH GRADING OPERATIONS TO ESTABLISH TEMPORARY DIVERSION DITCHES, AND SEDIMENT BASINS.
4. ROUGH GRADE ROADWAY AND SITE.
5. INSTALL STORM DRAINAGE SYSTEM WITH INLET PROTECTION DEVICES.
6. CONSTRUCT UNDERGROUND UTILITIES (WATER AND SANITARY SEWER).
7. PROVIDE TEMPORARY PROTECTION MEASURES AND DEVICES AS REQUIRED UNTIL UNDERGROUND UTILITIES AND PAVEMENT SECTION IS COMPLETE AND FINAL GRADES ARE STABILIZED WITH TEMPORARY VEGETATIVE COVER.
8. STABILIZE (FERTILIZE, SEED, AND MULCH) ALL DISTURBED AREAS AS SOON AS FINAL GRADES ARE ESTABLISHED.
9. ONCE CONSTRUCTION IS COMPLETE AND ALL DISTURBED AREAS ARE STABILIZED, REMOVE TEMPORARY EROSION CONTROL MEASURES, REMOVE SEDIMENT FROM SEDIMENT BASIN AND RESTORE TO ORIGINAL DIMENSIONS.

EXCAVATION, GRADING, AND BACKFILLING NOTES

1. ANY UNDERCUTTING IN GOOD SOIL SHALL BE REPLACED AND THE REPLACEMENT MATERIAL SHALL BE COMPACTED TO NINETY-FIVE (95) PERCENT OF MAXIMUM DENSITY OBTAINED AT OPTIMUM MOISTURE CONTENT, AS DETERMINED BY THE ASTM D 698 STANDARD PROCTOR TEST METHOD. IN THE EVENT THAT MATERIAL ENCOUNTERED AT PIPE GRADE, SUBGRADE OF PARKING OR ROADWAYS AND SUBGRADE OF BUILDING FOUNDATIONS IS FOUND TO BE SOFT, SPONGY, OR IN ANY OTHER WAY UNSUITABLE, THE CONTRACTOR SHALL NOTIFY THE GEOTECHNICAL ENGINEER IMMEDIATELY. SUCH UNSUITABLE MATERIAL SHALL BE REMOVED TO A DEPTH AS SPECIFIED BY THE GEOTECHNICAL ENGINEER AND REPLACED WITH A MINIMUM OF SIX (6) INCHES OF STONE, OR AS DIRECTED BY THE GEOTECHNICAL ENGINEER.
2. BEFORE BACKFILLING IS COMMENCED OVER PIPES AND OTHER INSTALLATIONS, EARTH FILL SHALL BE SOLIDLY TAMPED AROUND AND ABOVE THE PIPE TO A DEPTH OF ONE (1) FOOT ABOVE THE TOP OF THE PIPE. CARE SHALL BE TAKEN TO PREVENT ANY DISTURBANCE TO THE PIPE OR DAMAGE TO NEWLY MADE JOINTS. THE FILLING OF THE TRENCH SHALL BE CARRIED OUT SIMULTANEOUSLY ON BOTH SIDES OF THE PIPES IN SUCH A MANNER THAT INJURIOUS SIDE PRESSURES DO NOT OCCUR.
3. THE MATERIAL FOR BACKFILLING SHALL BE FREE FROM ALL PERISHABLE AND OBJECTIONABLE MATERIALS. BEFORE PLACING ANY BACKFILL, ALL RUBBISH, FORM, BLOCKS, WIRES OR OTHER UNSUITABLE MATERIAL SHALL BE REMOVED FROM EXCAVATION. THE BACK-FILLING OVER PIPES SHALL BE PLACED IN LAYERS NOT OVER SIX (6) INCHES THICK AND COMPACTED TO A MINIMUM DENSITY OF NINETY-FIVE (95) PERCENT OF THE MAXIMUM DRY DENSITY AS DETERMINED BY THE MODIFIED PROCTOR COMPACTION TEST TO A DEPTH OF 12 INCHES BELOW FINISHED GRADE. THE LAST 12 INCHES OF BACKFILL SHALL BE PLACED IN LAYERS NOT OVER SIX (6) INCHES THICK AND COMPACTED TO A MINIMUM DENSITY OF NINETY-EIGHT (98) PERCENT OF THE MAXIMUM DRY DENSITY AS DETERMINED BY THE MODIFIED PROCTOR COMPACTION TEST.

STORM DRAINAGE AND GRADING NOTES

1. IN ACCORDANCE WITH NC GENERAL STATUTES, NPDES REGULATIONS, AND NCDENR REQUIREMENTS, STORMWATER DISCHARGE OUTFALLS SHALL BE INSPECTED BY THE CONTRACTOR. INSPECTIONS SHALL BE PERFORMED BY THE CONTRACTOR AFTER EACH STORM EVENT OF 1/2 INCH OR GREATER, WITH ONE WEEKLY INSPECTION MINIMUM. NCDENR STANDARD INSPECTION REPORTS SHALL BE PREPARED AND SIGNED WITH COPIES PROVIDED TO THE OWNER, ARCHITECT, AND ENGINEER, BY THE CONTRACTOR.
2. INLET PROTECTION SHALL BE INSTALLED AROUND OUTFALL. DEVICES SHALL BE CONSTRUCTED TO FINAL PROPOSED CONDITION UPON STABILIZATION OF CONTRIBUTING GROUND SURFACES AND REMOVAL OF SEDIMENT FROM STORM PIPES.
3. ALL DIMENSIONS AND GRADES SHOWN ON THE PLANS SHALL BE FIELD VERIFIED BY THE CONTRACTOR PRIOR TO CONSTRUCTION. CONTRACTOR SHALL NOTIFY CONSTRUCTION MANAGER IF ANY DISCREPANCIES EXIST PRIOR TO PROCEEDING WITH CONSTRUCTION FOR NECESSARY PLAN OR GRADE CHANGES. NO EXTRA COMPENSATION SHALL BE PAID TO CONTRACTOR FOR ANY WORK DONE DUE TO DIMENSIONS OR GRADES SHOWN INCORRECTLY ON THESE PLANS IF SUCH NOTIFICATION HAS NOT BEEN GIVEN.
4. UNLESS OTHERWISE NOTED, GRADES AND SPOT ELEVATIONS NOTED ON PLANS INDICATE FINISHED GRADE OR PAVEMENT SURFACE. ALL DIMENSIONS ARE MEASURED TO THE BACK OF CURB UNLESS OTHERWISE INDICATED.
5. COORDINATION WITH CITY SURVEYOR TO DETERMINE MONUMENTATION IS REQUIRED. NOTE ON PLANS.
6. CONTRACTOR TO COORDINATE WITH CITY OF WILMINGTON CONSTRUCTION INSPECTOR TO ENSURE EDGE OF CATCH BASIN GRATES ALIGN WITH TRAVEL LANE AS REQUIRED.

MATERIALS AND EASEMENT NOTES:

1. ALL CATCH BASINS ARE NCDOT STD 840.02, 840.03
2. ALL DROP INLETS ARE NCDOT STD 840.14, 840.16
3. ALL STORM DRAINAGE PIPING TO BE HP STORM OR HDPE, UNLESS OTHERWISE NOTED
4. ALL STORM DRAINAGE PIPING CONVEYING DISCHARGE FROM THE PUBLIC RIGHT-OF-WAY SHALL BE CONTAINED WITHIN A PUBLIC DRAINAGE EASEMENT WHOSE WIDTH IS DETERMINED BY THE DEPTH OF BURY
5. ALL SANITARY SEWER LINES AND WATERLINES SHALL BE C-900 PVC, UNLESS OTHERWISE NOTED AND MEET CAPE FEAR PUBLIC UTILITY SPECIFICATIONS
6. A PUBLIC UTILITY EASEMENT SHALL BE RESERVED WITHIN THE STREET RIGHT-OF-WAY. A 10' NON-MUNICIPAL EASEMENT SHALL BE RESERVED ALONG BOTH SIDES OF ALL STREETS
7. WATER AND SANITARY SEWER UTILITIES ARE PUBLIC – CAPE FEAR PUBLIC UTILITY AUTHORITY

FIRE PROTECTION NOTES

1. FIRE SPRINKLERS WILL BE PROVIDED FOR BUILDING.
2. HYDRANT MUST BE WITHIN 150' OF THE FDC.
3. THE FDC MUST BE WITHIN 40' OF FIRE APPARATUS PLACEMENT.
4. LANDSCAPING OR PARKING CANNOT BLOCK OR IMPEDE THE FDC OR FIRE HYDRANTS. A 3-FOOT CLEAR SPACE SHALL BE MAINTAINED AROUND THE CIRCUMFERENCE OF THE HYDRANT AND FDC.
5. HYDRANTS MUST BE LOCATED WITHIN 8' OF THE CURB.
6. COMBUSTIBLE MATERIALS MAY NOT BE STORED OR ERECTED ONSITE WITHOUT CITY FIRE INSPECTOR APPROVAL.
7. NEW HYDRANTS MUST BE AVAILABLE FOR USE PRIOR TO CONSTRUCTION OF THE BUILDING(S).
8. UNDERGROUND FIRE LINE AND PRIVATE WATER MAINS MUST BE PERMITTED AND INSPECTED BY NEW HANOVER COUNTY FIRE DEPARTMENT FROM THE PUBLIC RIGHT-OF-WAY TO THE BUILDING. CONTACT NEW HANOVER COUNTY FIRE DEPARTMENT AT 910-798-7420.
9. A MINIMUM OF 5' SHALL SEPARATE UNDERGROUND FIRE LINES OR PRIVATE WATER MAINS FROM UNDERGROUND UTILITIES
10. CONTRACTOR SHALL MAINTAIN AN ALL WEATHER ACCESS FOR EMERGENCY VEHICLES AT ALL TIMES DURING CONSTRUCTION.
11. ALL WEATHER ACCESS ROAD MUST BE MAINTAINED AROUND CONSTRUCTION SITE AT ALL TIMES.
12. FIRE HYDRANTS ARE TO BE INSTALLED PER CFPUA SPECIFICATIONS.

UTILITY NOTES

1. SCHEDULE A PRECONSTRUCTION MEETING WITH CAPE FEAR PUBLIC UTILITY AUTHORITY 48 HOURS PRIOR TO CONSTRUCTION OF WATER AND SEWER LINES.
2. WATER AND SANITARY SEWER UTILITY MAINS ARE PRIVATE BEYOND THE PUBLIC STREET RIGHT-OF-WAY.
3. THIS PROJECT SHALL COMPLY WITH THE CFPUA CROSS CONNECTION CONTROL REQUIREMENTS. WATER METER(S) CANNOT BE RELEASED UNTIL ALL REQUIREMENTS ARE MET AND NCDENR HAS ISSUED THE "FINAL APPROVAL".
4. ALL COMMERCIAL WATER SERVICES AND ANY IRRIGATION SYSTEMS SUPPLIED BY CFPUA WATER SHALL HAVE A BACKFLOW PREVENTION DEVICE ACCEPTABLE TO CFPUA AND APPROVED BY USCFCCCHR OR ASSE.
5. BACKFLOW PREVENTION AND METERS WILL BE PROVIDED FOR BOTH FIRE LINES (RPDA) AND DOMESTIC SERVICE (RPZ). FIRE LINE BACKFLOW PREVENTER AND DOMESTIC SERVICE BACKFLOW PREVENTER WILL BE LOCATED AS SHOWN ON THE UTILITY PLANS. INSTALLER OF BACKFLOW PREVENTERS MUST CONTACT CFPUA PRIOR TO INSTALLING UNITS TO GIVE CFPUA THE OPTION TO VERIFY INSTALLATION PROCEDURES.
   - 5.1. REDUCED PRESSURE PRINCIPLE ASSEMBLY FOR DOMESTIC WATER SERVICE
   - 5.2. REDUCE PRESSURE DETECTOR ASSEMBLY WILL BE UTILIZED FOR THE BACKFLOW PREVENTER ON THE FIRE SERVICE.
6. IF THE CONTRACTOR DESIRES CFPUA WATER FOR CONSTRUCTION HE SHALL APPLY IN ADVANCE FOR THIS SERVICE AND MUST PROVIDE A REDUCED PRESSURE ZONE (RPZ) BACKFLOW PREVENTION DEVICE ON THE DEVELOPER'S SIDE OF THE WATER METER BOX.
7. WATER: 1.5" AND 2" PVC SERVICES SHALL BE CONSTRUCTED USING ASTM D2241, IPS, GASKETED PIPE, SDR 21. 4"-12" PVC MAINS AND SERVICES SHALL BE CONSTRUCTED USING AWWA C-900 PVC, CL235 (DR-18). REQUIREMENTS OF AWWA C900 ELASOMERIC PUSH-ON JOINTS.
8. SANITARY SEWER: FOR PIPE SIZES 4" AND 6" PIPE SHALL BE SCH 40 CONFORMING TO THE REQUIREMENTS OF ASTM D1785 WITH SOLVENT WELD JOINTS CONFORMING TO ASTM D2672. FOR PIPE SIZES 8" THROUGH 12", PIPE SHALL BE CLASS 150, DR18 CONFORMING TO THE REQUIREMENTS OF AWWA C900 WITH ELASTOMERIC PUSH-ON JOINTS CONFORMING TO ASTM D3212 OR ASTM D3139.
9. WATER AND SEWER SERVICES CANNOT BE ACTIVATED ON NEW MAINS UNTIL ENGINEER'S CERTIFICATION AND AS-BUILTS ARE RECEIVED AND "FINAL APPROVAL" ISSUED BY PUBLIC WATER SUPPLY SECTION OF NCDENR AND "FINAL ENGINEERING CERTIFICATION" ISSUED BY DIVISION OF WATER QUALITY OF NCDENR.
10. WATERLINE TRACER WIRE: SEE CFPUA DETAIL WD-17.
11. SITE UTILITY CONTRACTOR TO PROVIDE WATER AND SANITARY SEWER SERVICE TO WITHIN 5 FEET OF THE BUILDING. CONTRACTOR SHALL COORDINATE SITE PLAN CONNECTIONS WITH THE ARCHITECTURAL BUILDING PLANS.
12. MAXIMUM BENDING RADIUS FOR 8" C-900 PVC WATER MAIN BENDS IS 380' (ONE-HALF MANUFACTURER'S RECOMMENDED ALLOWABLE LONGITUDINAL BENDING).
13. UNDERGROUND UTILITIES: ALL NEW UTILITIES SHALL BE INSTALLED UNDERGROUND, EXCEPT WHERE SUCH PLACEMENT IS PROHIBITED OR DEEMED IMPRACTICAL BY THE UTILITY PROVIDER. UNDERGROUND TERMINAL FACILITIES FOR STREET LIGHTING ALONG THE PUBLIC STREETS ABUTTING THE SUBJECT SITE SHALL BE INSTALLED BY THE DEVELOPER.
14. MINIMUM OF 36" COVERAGE ABOVE ALL WATERMAINS.
15. MINIMUM OF 36" VERTICAL SEPARATION BETWEEN WATERLINES AND STORMDRAIN CURB INLETS
16. A VARIANCE IS NOT ANTICIPATED FROM ANY NORTH CAROLINA DIVISION OF WATER QUALITY (DWQ) REQUIREMENT.
17. PLANS ARE IN COMPLIANCE WITH CAPE FEAR PUBLIC UTILITY AUTHORITY TECHNICAL STANDARDS AND SPECIFICATIONS.

RELATION OF WATER MAINS TO SANITARY SEWERS:

1. LATERAL SEPARATION OF SANITARY SEWERS AND WATER MAINS: WATER MAINS SHALL BE LAID AT LEAST 10 FEET LATERALLY FROM EXISTING OR PROPOSED SEWERS UNLESS LOCAL CONDITIONS OR BARRIERS PREVENT A 10 FOOT LATERAL SEPARATION, IN WHICH CASE:
   - 1.1. THE WATER MAIN IS LAID IN A SEPARATE TRENCH, WITH THE ELEVATION OF THE BOTTOM OF THE WATER MAIN AT LEAST 18 INCHES ABOVE THE TOP OF THE SEWER, OR
   - 1.2. THE WATER MAIN IS LAID IN THE SAME TRENCH AS THE SEWER WITH THE WATER MAIN LOCATED AT ONE SIDE ON A BENCH OF UNDISTURBED EARTH, AND ABOVE THE TOP OF THE SEWER.
2. CROSSING A WATER MAIN OVER A SEWER MAIN: WHENEVER IT IS NECESSARY FOR A WATER MAIN TO CROSS OVER A SEWER THE WATER MAIN SHALL BE LAID AT SUCH AN ELEVATION THAT THE BOTTOM OF THE WATER MAIN IS AT LEAST 24 INCHES ABOVE THE TOP OF THE SEWER MAIN. UNLESS LOCAL CONDITIONS OR BARRIERS PREVENT AN 18 INCH VERTICAL SEPARATION – IN WHICH CASE BOTH THE WATER MAIN AND THE SEWER MAIN SHALL BE CONSTRUCTED OF FERROUS MATERIALS AND WITH JOINTS THAT ARE EQUIVALENT TO WATER MAIN STANDARDS FOR A DISTANCE OF 10 FEET ON EACH SIDE OF THE POINT OF CROSSING.
3. CROSSING A WATER MAIN UNDER A SEWER MAIN: WHENEVER IT IS NECESSARY FOR A WATER MAIN TO CROSS UNDER A SEWER MAIN BOTH THE WATER MAIN AND THE SEWER MAIN SHALL BE CONSTRUCTED OF FERROUS MATERIALS AND WITH JOINTS EQUIVALENT TO WATER MAIN STANDARDS FOR A DISTANCE OF 10 FEET ON EACH SIDE OF THE POINT OF CROSSING.
4. CROSSING A SEWER MAIN/WATER MAIN OVER OR UNDER A STORM DRAIN: WHENEVER IT IS NECESSARY FOR A SEWER MAIN/WATER MAIN TO CROSS A STORM DRAIN PIPE, THE SEWER MAIN/WATER MAIN SHALL BE LAID AT SUCH AN ELEVATION THAT THE OUTSIDE OF THE SEWER MAIN/WATER MAIN NEAREST TO THE OUTSIDE OF THE STORM DRAIN PIPE SHALL MAINTAIN A 24 INCH CLEAR SEPARATION DISTANCE HORIZONTAL, OR THE SEWER MAIN/WATER MAIN SHALL EITHER BE CONSTRUCTED OF DUCTILE IRON PIPE OR ENCASED IN EITHER CONCRETE OR DUCTILE IRON PIPE FOR AT LEAST 5 FEET ON EITHER SIDE OF THE CROSSING.

TREE PROTECTION NOTES

1. PRIOR TO ANY CLEARING, GRADING, OR CONSTRUCTION ACTIVITY, TREE PROTECTION FENCING WILL BE INSTALLED AROUND PROTECTED TREES OR GROVES OF TREES. NO CONSTRUCTION WORKERS, TOOLS, MATERIALS OR VEHICLES ARE PERMITTED WITHIN THE TREE PROTECTION FENCING.
2. NO LAND DISTURBANCE, INCLUDING TREE REMOVAL, IS TO OCCUR OUTSIDE THE PROJECT BOUNDARY SHOWN ON THE PLANS, UNLESS OTHERWISE NOTED. TREE PROTECTION FENCING IS SHOWN OUTSIDE OF PROJECT BOUNDARY FOR PROTECTION OF EXISTING TREES IN CLOSE PROXIMITY TO PROPOSED CONSTRUCTION.
3. PROTECTIVE FENCING IS TO BE PROPERLY MAINTAINED THROUGHOUT THE DURATION OF THE PROJECT AND CONTRACTOR SHALL RECEIVE ADEQUATE INSTRUCTIONS ON TREE PROTECTION METHODS.
4. LAND CLEARING AND CONSTRUCTION CONTRACTORS SHALL RECEIVE ADEQUATE INSTRUCTION ON TREE PROTECTION REQUIREMENTS AND METHODS.
5. NO EQUIPMENT IS ALLOWED ON THE SITE UNTIL ALL TREE PROTECTION FENCING AND SILT FENCING HAS BEEN INSTALLED AND APPROVED BY THE LANDSCAPE ARCHITECT.
6. ANY TREES AND/OR AREAS DESIGNATED TO BE PROTECTED MUST BE PROPERLY BARRICADED WITH FENCING AND PROTECTED THROUGHOUT CONSTRUCTION TO INSURE THAT NO CLEARING AND GRADING OR STAGING OF MATERIALS WILL OCCUR IN THOSE AREAS.
7. REGULATED AND SIGNIFICANT TREES IN THE STREET YARD AND ANY TREES IN ANY REQUIRED BUFFERS SHALL TO BE RETAINED [62.1-3(1) (A) & (B)].

EROSION CONTROL NOTES

1. ANY GRADING BEYOND THE DENUDED LIMITS SHOWN ON THE PLAN IS A VIOLATION OF THE COUNTY EROSION CONTROL ORDINANCE AND IS SUBJECT TO A FINE.
2. GRADING MORE THAN ONE ACRE WITHOUT AN APPROVED EROSION CONTROL PLAN IS A VIOLATION OF STATE LAW AND IS SUBJECT TO A FINE. ANY BUILDER THAT ANTICIPATED THE DISTURBANCE OF MORE THAN ONE ACRE WILL BE REQUIRED TO GET AN EROSION CONTROL PERMIT FROM NEW HANOVER COUNTY.
3. GROUND COVER MUST BE PROVIDED ON EXPOSED SLOPES WITHIN 21 CALENDAR DAYS FOLLOWING COMPLETION OF ANY PHASE OF GRADING; AND, A PERMANENT GROUND COVER FOR ALL DISTURBED AREAS WITHIN 15 WORKING DAYS OR 90 CALENDAR DAYS (WHICHEVER IS SHORTER) FOLLOWING COMPLETION OF CONSTRUCTION OR DEVELOPMENT.
4. ADDITIONAL MEASURES TO CONTROL EROSION AND SEDIMENT MAY BE REQUIRED BY A REPRESENTATIVE OF NEW HANOVER COUNTY.
5. SLOPES SHALL BE GRADED NO STEEPER THAN 3:1.
6. ADDITIONAL DEVICES MAY BE REQUIRED AS AGREED UPON BY THE FIELD INSPECTOR, ENGINEER, AND OWNER.
7. IF ACTIVE CONSTRUCTION CEASES IN ANY AREA FOR MORE THAN 15 WORKING DAYS OR 90 CALENDAR DAYS (WHICHEVER IS SHORTER), ALL DISTURBED AREAS MUST BE SEEDED, MULCHED, AND TACKED.
8. WITHIN 24 HOURS FOLLOWING ANY RAIN EVENT, THE CONTRACTOR SHALL INSPECT AND REPAIR, AS NECESSARY, ALL DAMAGED EROSION CONTROL MEASURES.
9. ALL ACTIVITY AND INSTALLATION OF EROSION CONTROL MATTING WILL BE COMPLETE PRIOR TO ANY RAIN EVENT.

EROSION CONTROL MAINTENANCE PLAN:

1. ALL SEDIMENT AND EROSION CONTROL DEVICES SHALL BE INSPECTED AND REPAIRED, AS NECESSARY, EVERY SEVEN (7) DAYS AND WITHIN 24 HOURS OF EVERY ONE-HALF (0.5) INCH OR GREATER RAINFALL.
2. ALL EROSION CONTROL DEVICES SHALL BE PROPERLY MAINTAINED DURING ALL PHASES OF CONSTRUCTION UNTIL THE COMPLETION OF ALL CONSTRUCTION ACTIVITIES AND ALL DISTURBED AREAS HAVE BEEN STABILIZED. ADDITIONAL CONTROL DEVICES MAY BE REQUIRED DURING CONSTRUCTION IN ORDER TO CONTROL EROSION AND/OR OFFSITE SEDIMENTATION. ALL TEMPORARY CONTROL DEVICES SHALL BE REMOVED ONCE CONSTRUCTION IS COMPLETE AND THE SITE IS STABILIZED.
3. SEDIMENT SHALL BE REMOVED FROM BEHIND THE SILT FENCE WHEN IT BECOMES ABOUT 0.5 FEET DEEP. THE SEDIMENT FENCE WILL BE REPAIRED OR REPLACED AS NECESSARY TO MAINTAIN A BARRIER.
4. ALL AREAS WILL BE FERTILIZED, RESEEDED AS NECESSARY, AND MULCHED ACCORDING TO SPECIFICATIONS IN THE VEGETATIVE PLAN TO MAINTAIN A VIGOROUS, DENSE VEGETATIVE COVER.
5. STONE CONSTRUCTION ENTRANCE TO BE CLEANED WHEN SEDIMENT ACCUMULATIONS ARE VISIBLE OR SEDIMENT IS TRACKED ON TO THE PAVEMENT. STONE WILL BE PERIODICALLY TOP DRESSED WITH 2 INCHES OF #4 STONE TO MAINTAIN 6 INCH DEPTH. THE CONTRACTOR SHALL DAILY REMOVE MUD/SOIL FROM PAVEMENT, AS REQUIRED.
6. INSPECT TEMPORARY DIVERSIONS AND CHECK DAMS ONCE A WEEK AND AFTER EVERY RAINFALL. IMMEDIATELY REMOVE SEDIMENT FROM THE FLOW AREA AND REPAIR THE DIVERSION RIDGE AND CHECK DAM. CAREFULLY CHECK OUTLETS AND MAKE TIMELY REPAIRS AS NEEDED. WHEN THE AREA PROTECTED IS PERMANENTLY STABILIZED, REMOVE THE RIDGE AND THE CHANNEL TO BLEND WITH THE NATURAL GROUND LEVEL AND APPROPRIATELY STABILIZE IT.
7. INSPECT TEMPORARY SEDIMENT BASINS AT LEAST WEEKLY AND AFTER EACH SIGNIFICANT (1/2" OR GREATER) RAINFALL EVENT AND REPAIR IMMEDIATELY. REMOVE SEDIMENT AND RESTORE THE BASIN TO ITS ORIGINAL DIMENSIONS WHEN IT ACCUMULATES TO ONE-HALF THE DESIGN DEPTH. PLACE REMOVED SEDIMENT IN AN AREA WITH SEDIMENT CONTROLS.
8. CHECK THE SEDIMENT BASIN EMBANKMENT, SPILLWAYS, AND OUTLET FOR EROSION DAMAGE, AND INSPECT THE EMBANKMENT FOR PIPING AND SETTLEMENT. MAKE ALL NECESSARY REPAIRS IMMEDIATELY. REMOVE ALL TRASH AND OTHER DEBRIS FROM THE RISER AND POOL AREA.
9. INSPECT INLETS AT LEAST WEEKLY AND AFTER EACH SIGNIFICANT (0.5" OR GREATER) RAINFALL EVENT. CLEAR THE MESH WIRE OF ANY DEBRIS OR OTHER OBJECTS TO PROVIDE ADEQUATE FLOW FOR SUBSEQUENT RAINS. TAKE CARE NOT TO DAMAGE OR UNDERCUT THE WIRE MESH DURING SEDIMENT REMOVAL. REPLACE STONE AS NEEDED. INLET PROTECTION SHOULD BE CLEANED OUT WHEN IT IS HALF FULL.
10. INSPECT BAFFLES AT LEAST ONCE A WEEK AND AFTER EACH RAINFALL. MAKE ANY REQUIRED REPAIRS IMMEDIATELY. BE SURE TO MAINTAIN ACCESS TO THE BAFFLES. SHOULD THE FABRIC OF A BAFFLE COLLAPSE, TEAR, DECOMPOSE, OR BECOME INEFFECTIVE, REPLACE IT PROMPTLY. REMOVE SEDIMENT DEPOSITS WHEN IT REACHES HALF FULL TO PROVIDE ADEQUATE STORAGE VOLUME FOR THE NEXT RAIN AND TO REDUCE PRESSURE ON THE BAFFLES. TAKE CARE TO AVOID DAMAGING THE BAFFLES DURING CLEAN OUT. SEDIMENT DEPTH SHOULD NEVER EXCEED HALF THE DESIGNED STORAGE DEPTH. AFTER THE CONTRIBUTING DRAINAGE AREAS HAS BEEN PROPERLY STABILIZED, REMOVE ALL BAFFLE MATERIALS AND UNSTABLE SEDIMENT DEPOSITS, BRING THE AREA TO GRADE, AND STABILIZE IT.
11. INSPECT THE SKIMMER FOR CLOGGING. PULL THE SKIMMER TO THE SIDE OF THE BASIN AND REMOVE ANY DEBRIS. ALSO CHECK THE ORIFICE INSIDE THE SKIMMER AND THE ARM OR BARREL PIPE FOR CLOGGING; IF CLOGGED, REMOVE THE DEBRIS.

NOTE (G.S. 113A-57 (2))

THE ANGLE FOR GRADED SLOPES AND FILLS SHALL BE NO GREATER THAN THE ANGLE THAT CAN BE RETAINED BY VEGETATIVE COVER OR OTHER ADEQUATE EROSION CONTROL DEVICES OR STRUCTURES. IN ANY EVENT, SLOPES LEFT EXPOSED WILL, WITHIN 21 CALENDAR DAYS OF COMPLETION OF ANY GRADING, BE PLANTED OR OTHERWISE PROVIDED WITH TEMPORARY OR PERMANENT GROUND COVER, DEVICES, OR STRUCTURES SUFFICIENT TO RESTRAIN EROSION.

UTILITY COMPANY CONTACTS

DUKE/PROGRESS ENERGY: SID LIVINGSTON/MARK HATFIELD (910) 452-2777
DUKE ENERGY (TRANSMISSION): BILL WILDER (910) 772-4903
AT&T: JAMES BATSON (910) 452-5300
SPECTRUM: ROBERT JOHN (910) 216-4494
PIEDMONT NATURAL GAS: PAUL GONKA (910) 512-2841
DJ MEDEIROS (910) 431-3233
CAPE FEAR PUBLIC UTILITY AUTHORITY: (910) 332-6550

GROUND STABILIZATION CRITERIA

SITE AREA DESCRIPTION	STABILIZATION TIMEFRAME	STABILIZATION TIMEFRAME EXCEPTIONS
PERIMETER DIKES, SWALES, DITCHES AND SLOPES	7 DAYS	NONE
HIGH QUALITY WATER ZONES	7 DAYS	NONE
SLOPES STEEPER THAN 3:1	7 DAYS	IF SLOPES ARE 10 FT OR LESS IN IN LENGTH AND ARE NOT STEEPER THAN 2:1, 14 DAYS ARE ALLOWED
SLOPES 3:1 TO 4:1	14 DAYS	– 7 DAYS FOR SLOPES GREATER THAN 50 FT IN LENGTH AND WITH SLOPES STEEPER THAN 4:1 – 7 DAYS FOR PERIMETER DIKES, SWALES, DITCHES, PERIMETER SLOPES AND HQW ZONES – 10 DAYS FOR FALLS LAKE WATERSHED
AREAS WITH SLOPES FLATTER THAN 4:1	14 DAYS	– 7 DAYS FOR PERIMETER DIKES, SWALES, DITCHES, PERIMETER SLOPES AND HQW ZONES – 10 DAYS FOR FALLS LAKE WATERSHED UNLESS THERE IS ZERO SLOPE

CAPE FEAR PUBLIC UTILITY AUTHORITY CONSTRUCTION PROCEDURE:

1. THE DESIGN ENGINEERING SHALL SUBMIT 3 SETS OF FINAL DESIGN PLANS AND APPROVED SPECIFICATIONS PRIOR TO SCHEDULING THE PRE-CONSTRUCTION MEETING.
2. SUBMITTALS FOR MATERIALS SHOULD BE MADE IN ACCORDANCE WITH CFPUA SPECIFICATION SECTION 01340. MATERIAL SHOP DRAWING SUBMITTALS ARE REQUIRED FOR ALL PHYSICAL ASSETS TO ENSURE THEY COMPLY WITH CFPUA TECHNICAL SPECIFICATIONS AND DETAILS. THESE SUBMITTALS ARE PROJECT-SPECIFIC, AND MUST INCLUDE OR HIGHLIGHT ONLY THE SPECIFIC MATERIALS TO BE USED IN THE PROJECT. THE SUBMITTAL APPROVAL PROCESS IS GENERALLY AS FOLLOWS:

   MATERIAL VENDOR FURNISHES SUBMITTALS TO THE CONTRACTOR BASED ON THE PROJECT REQUIREMENTS.

   CONTRACTOR REVIEWS THE SUBMITTALS FOR COMPLIANCE WITH THE APPROVED CONSTRUCTION DRAWINGS, CFPUA TECHNICAL SPECIFICATIONS AND DETAILS, AND FORWARDS TO THE DEVELOPER'S ENGINEER-OF-RECORD WHEN COMPLETE.

   THE DEVELOPER'S ENGINEER-OF-RECORD VERIFIES COMPLIANCE, STAMPS AND SIGNS THE SUBMITTAL, AND FORWARDS THE PACKAGE TO THE CFPUA CONSTRUCTION MANAGER. IF IT IS DETERMINED THAT THE MATERIAL SHOP DRAWING SUBMITTAL IS NOT IN COMPLIANCE, THE ENGINEER SHALL RETURN IT TO THE CONTRACTOR FOR CORRECTION AND RESUBMISSION AS NOTED ABOVE.

   CFPUA'S CONSTRUCTION MANAGER REVIEWS THE SUBMITTAL FROM THE DEVELOPER'S ENGINEER-OF-RECORD, VERIFIES COMPLIANCE, AND NOTIFIES THE ENGINEER THAT THE MATERIALS ARE APPROVED FOR CONSTRUCTION. IF IT IS DETERMINED THAT THE MATERIAL SHOP DRAWING SUBMITTAL IS NOT IN COMPLIANCE, THE SUBMITTAL WILL BE RETURNED TO THE ENGINEER FOR CORRECTION AND RESUBMISSION AS NOTED ABOVE.
3. ANY REQUEST FOR DEVIATIONS FROM THE STAMPED DRAWINGS AND MATERIAL SUBMITTALS MUST BE SUBMITTED TO THE CFPUA CONSTRUCTION MANAGER. THE DEVIATION WILL BE REVIEWED BY CFPUA STAFF. THE ENGINEER, CONTRACTOR AND CFPUA INSPECTOR WILL BE NOTIFIED IF IT IS APPROVED, NEEDS TO BE REVISED AND RESUBMITTED OR REJECTED. ANY CHANGES TO THE STAMPED CONSTRUCTION DOCUMENTS MADE IN THE FIELD BY THE CONTRACTOR MUST BE APPROVED BY THE ENGINEER OF RECORD AND CFPUA CONSTRUCTION MANAGER. THE CFPUA INSPECTOR CANNOT APPROVE MAJOR CHANGES FROM THE STAMPED CONSTRUCTION DOCUMENTS.
4. THE CFPUA INSPECTOR SHALL BE NOTIFIED WHEN ANY MATERIAL IS DELIVERED TO THE JOB SITE. THE CFPUA INSPECTOR WILL VERIFY THAT ALL MATERIALS MEET CFPUA SPECIFICATIONS, DETAILS, AND/OR APPROVED SUBMITTAL. THE CFPUA INSPECTOR WILL NOTIFY THE CONTRACTOR AND THE CFPUA CONSTRUCTION MANAGER OF ANY UNAPPROVED MATERIAL, AND THAT THE UNAPPROVED MATERIAL MUST BE REMOVED FROM THE PROJECT SITE.
5. CONTRACTOR SHALL GIVE TWO (2) BUSINESS DAYS NOTIFICATION FOR SCHEDULING TO THE ASSIGNED CFPUA INSPECTOR FOR EACH OF THE FOLLOWING:

- OPERATING A CFPUA VALVE (INCLUDES TAPPING VALVES)
- WHEN BEGINNING CONSTRUCTION AND IF THE CONTRACTOR PULLS OFF THE SITE
- LAYING OUT OF ANY CONNECTION IN EXISTING MANHOLE
- CUTTING IN ANY NEW MANHOLES ON EXISTING LINES
- CORING ANY MANHOLES
- CONNECTING TO AN EXISTING SEWER FORCE MAINS
- CONNECTING ONTO EXISTING WATER LINES
- ANY BORES AND THREADING CARRIER PIPES
- ALL CAMERA WORK, TESTING, CHLORINATION AND WATER SAMPLING
- ALL TESTING

CAPE FEAR PUBLIC UTILITY AUTHORITY TESTING PROCEDURE:

1. ALL STRUCTURES, PRESSURE PIPING AND GRAVITY SEWER PIPING SHALL BE TESTED BY THE CONTRACTOR AS SPECIFIED IN THE CFPUA SPECIFICATIONS IN ACCORDANCE WITH APPLICABLE REGULATIONS AND AS DIRECTED BY THE CFPUA INSPECTOR. ALL TESTING MUST BE CONDUCTED IN THE PRESENCE OF THE CFPUA INSPECTOR. THE CONTRACTOR IS TO GIVE TWO (2) BUSINESS DAYS NOTIFICATION FOR SCHEDULING, TO THE ASSIGNED CFPUA INSPECTOR FOR ALL TESTING.
2. ALL PRESSURE PIPE LINES MUST BE SUBJECTED TO HYDROSTATIC TESTING IN ACCORDANCE WITH THE APPROPRIATE CFPUA SPECIFICATION. THESE PIPE LINES SHALL BE TESTED TO 150 PSI FOR A PERIOD OF TWO (2) HOURS. IF THE PRESSURE DROPS MORE THAN THREE (3) PSI, THE TEST FAILS. REFER TO THE APPROPRIATE CFPUA SPECIFICATION FOR MORE INFORMATION ON THE PROCEDURE.
3. ALL WATER MAINS AND SERVICES MUST BE FLUSHED, CHLORINATED AND SAMPLED IN ACCORDANCE WITH THE CFPUA SPECIFICATION 02660 AND AS DIRECTED BY THE CFPUA INSPECTOR.
4. SEWER LINE SEGMENT TESTING: EACH SEWER LINE SEGMENT (THE SEWER MAIN BETWEEN MANHOLES) SHALL BE TESTED:

   THIRTY (30) DAYS AFTER INSTALLATION AND PRIOR TO FINAL ACCEPTANCE OF THE PROJECT, ALL SEWER LINE SEGMENTS AND ALL SERVICES SHALL BE CAMERA INSPECTED AND VIDEO RECORDED. THE CFPUA INSPECTOR WILL REVIEW THE VIDEO RECORDING FOR ACCEPTANCE.

   AS AN ALTERNATIVE TO WAITING THIRTY (30) DAYS TO PERMIT STABILIZATION OF THE SOIL-PIPE SYSTEM, THE CFPUA MAY ACCEPT CERTIFICATION FROM A SOIL TESTING FIR VERIFYING THAT THE BACKFILL OF THE TRENCH HAS BEEN COMPACTED TO AT LEAST 95% MAXIMUM DENSITY.

   AFTER TWO (2) PAPER COPIES OF THE AS-BUILTS HAVE BEEN SUBMITTED TO THE CFPUA INSPECTOR.

   AFTER GRAVEL HAS BEEN INSTALLED ON ALL ROADWAYS.
5. VIDEO INSPECTION TESTING: THE CONTRACTOR SHALL PROVIDE A DVD(S) OF EACH SEWER LINE SEGMENT AND SERVICE LINE TO ENSURE THAT THE LINES MEET MINIMUM STANDARDS. THE DVD(S) WILL BE REVIEWED IN THE ORDER THEY ARE RECEIVED. THE TYPICAL REVIEW TIME IS GENERALLY TEN (10) TO FIFTEEN (15) BUSINESS DAYS BUT WILL DEPEND ON THE COMPLEXITY OF THE PROJECT, SIZE, QUALITY OF THE DVD(S), ETC.

   THE MAIN LINE CAMERA INSPECTION MUST HAVE PROJECT NAME, FOOTAGES, MANHOLE NUMBERS, AND DATES OF INSPECTION.

   THE SERVICE LINE CAMERA INSPECTION MUST INCLUDE PROJECT NAME, FOOTAGES, ADDRESS AND/OR LOT NUMBER, AND DATE OF INSPECTION.

   THE CAMERA INSPECTION MUST SHOW THE FULL DIAMETER OF THE PIPE.

   THE CAMERA INSPECTION MUST BE PERFORMED UPON COMPLETION OF CLEANING AND POTABLE WATER INTRODUCED INTO THE SYSTEM TO BE TESTED. ALL DEFECTS IN THE PIPELINE AND APPURTENANCES SHALL BE REMEDIED BY THE CONTRACTOR AT NO ADDITIONAL EXPENSE TO THE CFPUA AND WILL BE RE-INSPECTED AS OUTLINED ABOVE.
6. TWO (2) SETS OF AS-BUILT RECORD DRAWINGS SHALL BE PROVIDED IN ACCORDANCE WITH CFPUA SPECIFICATION SECTION 01720 FOR REVIEW.

REV.NO.	DESCRIPTIONS	DATE

REVISIONS

SEAL

SEAL
NORTH CAROLINA PROFESSIONAL SEAL 025503 ENGINEER RICHARD A. MOORE
5/27/2020

MCKIM&CREED
243 North Front Street
Wilmington, North Carolina 28401
Phone: (910)343-1048, Fax: (910)251-8282
License: F-1222
www.mckimcreed.com

D·R·HORTON® DHI Listed NYSE
America's Builder

SIDBURY FARMS

NEW HANOVER COUNTY, NORTH CAROLINA

GENERAL NOTES

DATE:	02/12/2020
MCE PROJ. #	4245-0012
DRAWN	RAS/JEB
DESIGNED	RAS/JEB
CHECKED	RAM
PROJ. MGR.	RAM

SCALE
HORIZONTAL: N/A
VERTICAL: N/A

M&C FILE NUMBER G-002
DRAWING NUMBER 2

STATUS: TRC SUBMITTAL
REVISION

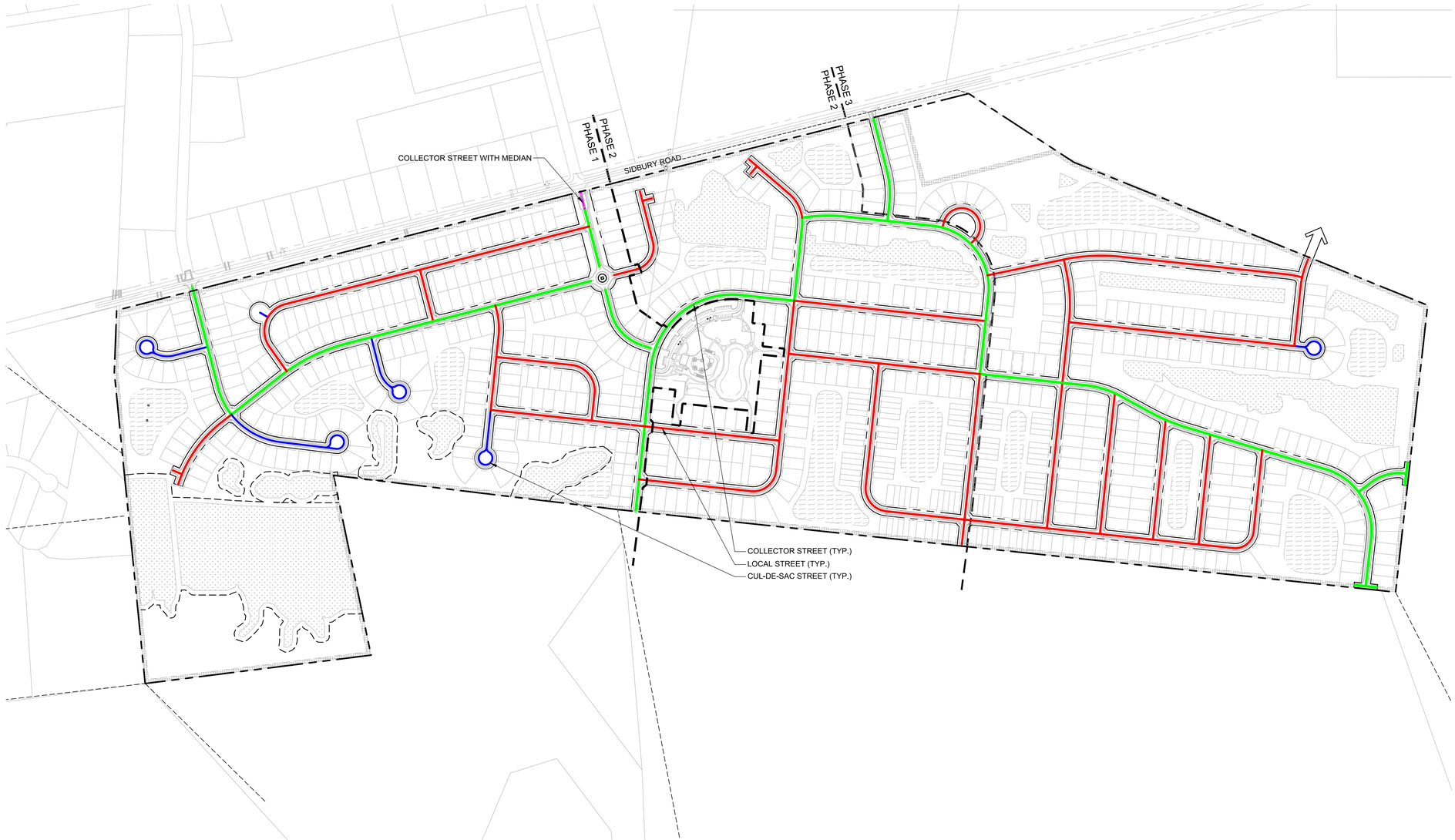

SYMBOL LEGEND

SYMBOL	DESCRIPTION	TRAVELWAY WIDTH (FOC TO FOC)
	COLLECTOR STREET	26'-0"
	COLLECTOR STREET WITH MEDIAN	26'-0"
	LOCAL STREET	24'-0"
	CUL-DE-SAC STREET	22'-0"

NOTES:
-ALL TRAVELWAY WIDTHS BASED ON ROAD DESIGN STANDARDS FROM NEW HANOVER COUNTY SUBDIVISION REGULATIONS
-ALL RIGHT OF WAYS ARE 50'

N

300' 0 300' 600'

SCALE 1" = 300'

REV.NO.	DESCRIPTIONS	DATE

REVISIONS

SEAL

SEAL

NORTH CAROLINA PROFESSIONAL SEAL 025503 ENGINEER RICHARD A. MOORE

5/27/2020

McKIM&CREED
243 North Front Street
Wilmington, North Carolina 28401
Phone: (910)343-1048, Fax: (910)251-8282
License: F-1222
www.mckimcreed.com

D·R·HORTON® DHI Listed NYSE
America's Builder

SIDBURY FARMS

NEW HANOVER COUNTY, NORTH CAROLINA

ROADWAY CLASSIFICATIONS

DATE:	02/12/2020
MCE PROJ. #	4245-0012
DRAWN	RAS/JEB
DESIGNED	RAS/JEB
CHECKED	RAM
PROJ. MGR.	RAM

SCALE
HORIZONTAL: 1"=300'
VERTICAL: N/A

M&C FILE NUMBER G-003
DRAWING NUMBER 3

STATUS: TRC SUBMITTAL
REVISION

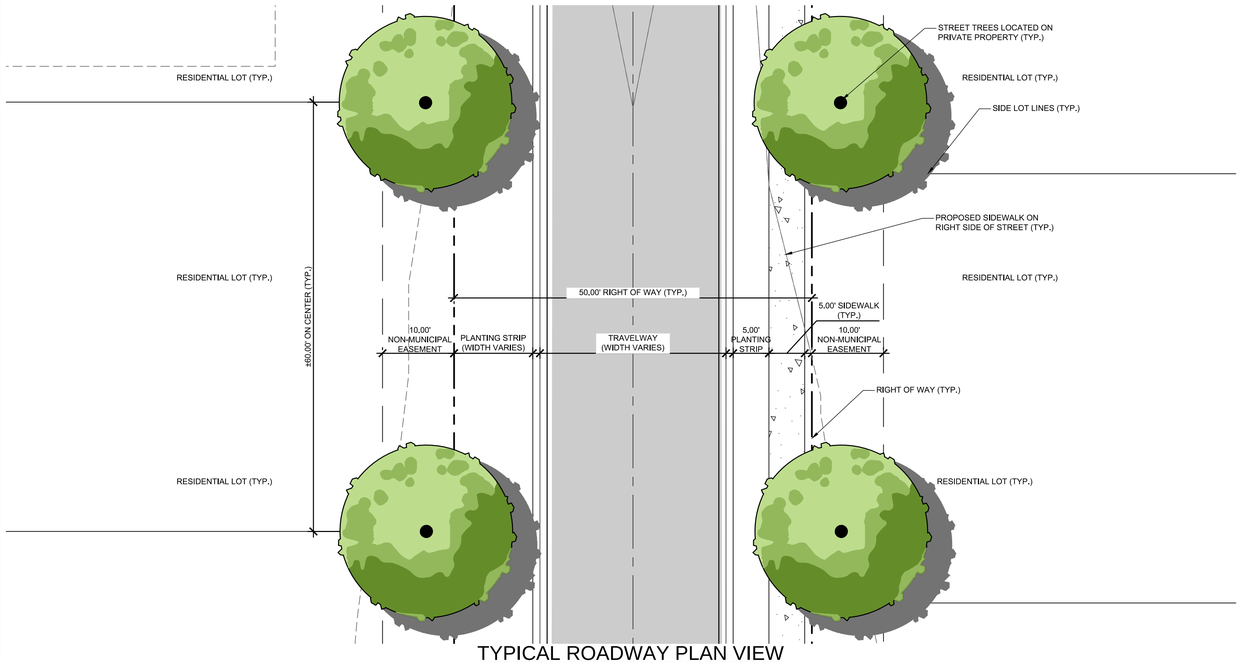

TYPICAL ROADWAY PLAN VIEW

SCALE: 1" = 10'-0"

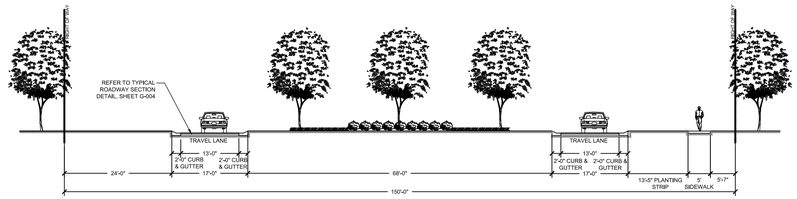

ROUNDABOUT SECTION

SCALE: 1" = 1'-0"

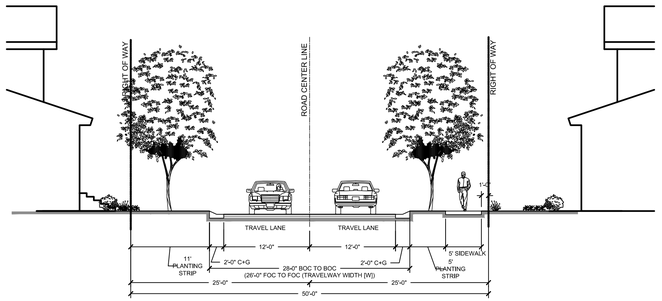

TYPICAL COLLECTOR ROADWAY SECTION

SCALE: 1" = 10'-0"

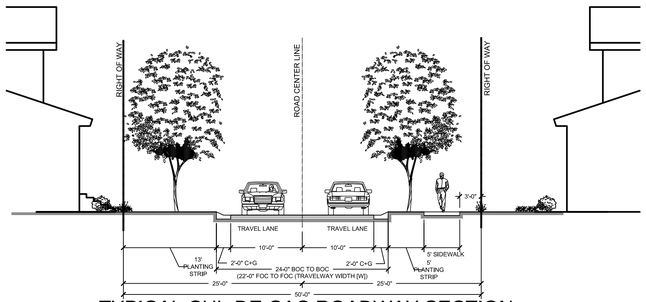

TYPICAL CUL-DE-SAC ROADWAY SECTION

SCALE: 1" = 10'-0"

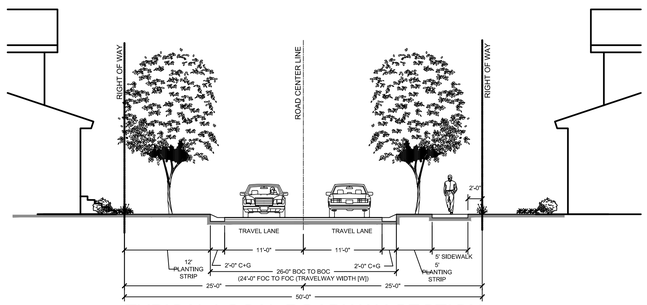

TYPICAL LOCAL ROADWAY SECTION

SCALE: 1" = 10'-0"

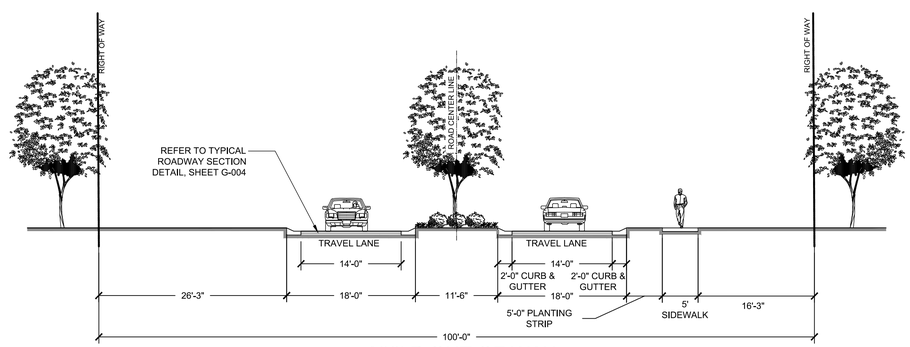

100' RIGHT OF WAY (WITH MEDIAN)

SCALE: 1" = 10'-0"

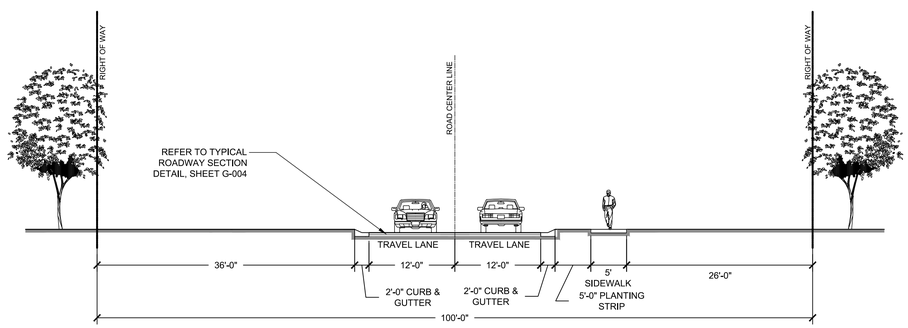

100' RIGHT OF WAY (WITHOUT MEDIAN)

SCALE: 1" = 10'-0"

2 | TYPICAL ROADWAY SECTIONS

SCALE: AS SHOWN

REV.NO.	DESCRIPTIONS	DATE
	REVISIONS	

SEAL

SEAL
NORTH CAROLINA PROFESSIONAL SEAL 025503 ENGINEER RICHARD A. MOORE
5/27/2020

McKIM&CREED
243 North Front Street
Wilmington, North Carolina 28401
Phone: (910)343-1048, Fax: (910)251-8282
License: F-1222
www.mckimcreed.com

D·R·HORTON® DHI Listed NYSE
America's Builder

SIDBURY FARMS

NEW HANOVER COUNTY, NORTH CAROLINA

TYPICAL STREET SECTIONS

DATE:	02/12/2020
MCE PROJ. #	4245-0012
DRAWN	RAS/JEB
DESIGNED	RAS/JEB
CHECKED	RAM
PROJ. MGR.	RAM

SCALE: HORIZONTAL: AS SHOWN VERTICAL: N/A

M&C FILE NUMBER: G-004

DRAWING NUMBER: 4

STATUS: TRC SUBMITTAL

REVISION

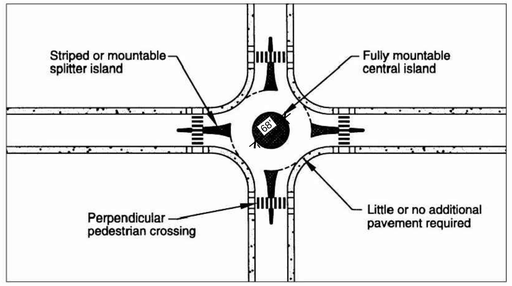

TYPICAL MINI-ROUNDABOUT DETAIL
(PER USDOT)
SCALE: NTS

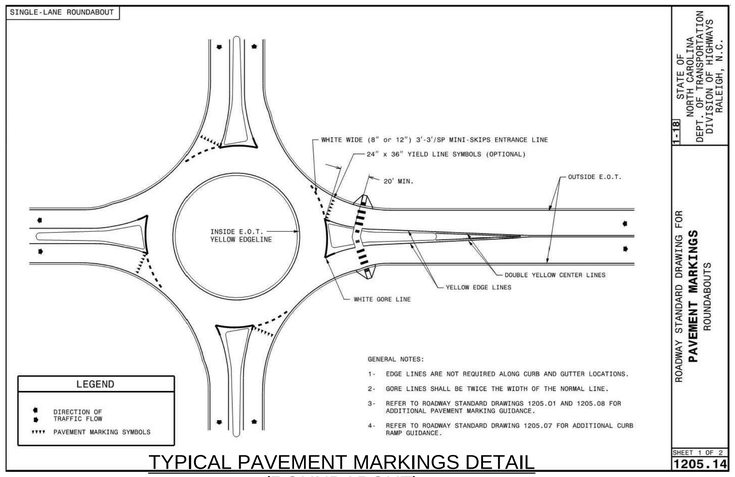

TYPICAL PAVEMENT MARKINGS DETAIL
(ROUNDABOUT)
SCALE: NTS

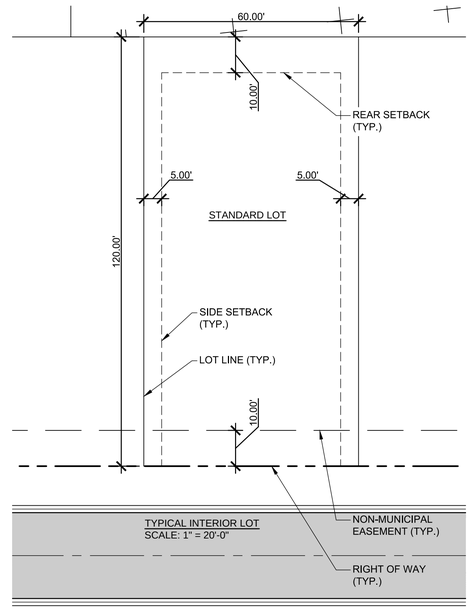

TYPICAL INTERIOR LOT
SCALE: 1" = 20'-0"

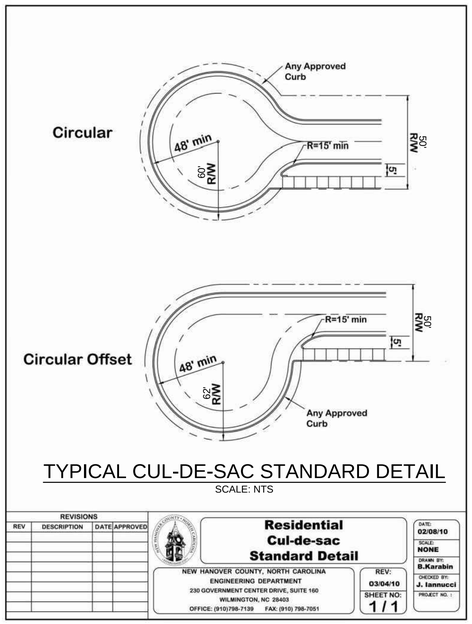

TYPICAL CUL-DE-SAC STANDARD DETAIL
SCALE: NTS

REVISIONS			
REV	DESCRIPTION	DATE	APPROVED

Residential
Cul-de-sac
Standard Detail

NEW HANOVER COUNTY, NORTH CAROLINA
ENGINEERING DEPARTMENT
230 GOVERNMENT CENTER DRIVE, SUITE 160
WILMINGTON, NC 28403
OFFICE: (910)798-7139 FAX: (910) 798-7051

REV: 03/04/10
SHEET NO: 1 / 1
DATE: 02/08/10
SCALE: NONE
DRAWN BY: B.Karabin
CHECKED BY: J. Iannucci
PROJECT NO. :

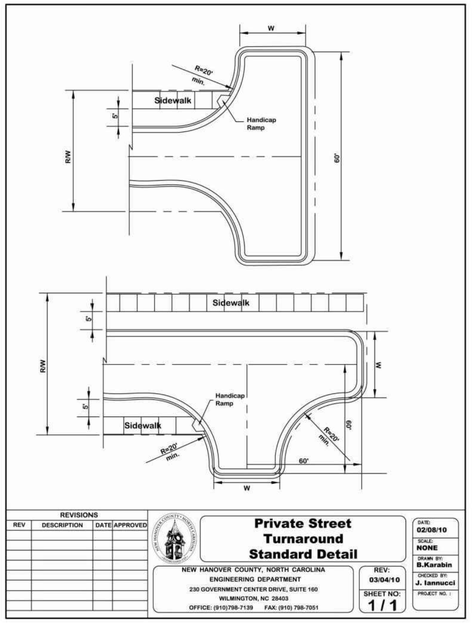

TYPICAL PRIVATE STREET TURNAROUND DETAIL
SCALE: NTS

REVISIONS			
REV	DESCRIPTION	DATE	APPROVED

Private Street
Turnaround
Standard Detail

NEW HANOVER COUNTY, NORTH CAROLINA
ENGINEERING DEPARTMENT
230 GOVERNMENT CENTER DRIVE, SUITE 160
WILMINGTON, NC 28403
OFFICE: (910)798-7139 FAX: (910) 798-7051

REV: 03/04/10
SHEET NO: 1 / 1
DATE: 02/08/10
SCALE: NONE
DRAWN BY: B.Karabin
CHECKED BY: J. Iannucci
PROJECT NO. :

2 TYPICAL ROADWAY DETAILS — SCALE: AS SHOWN

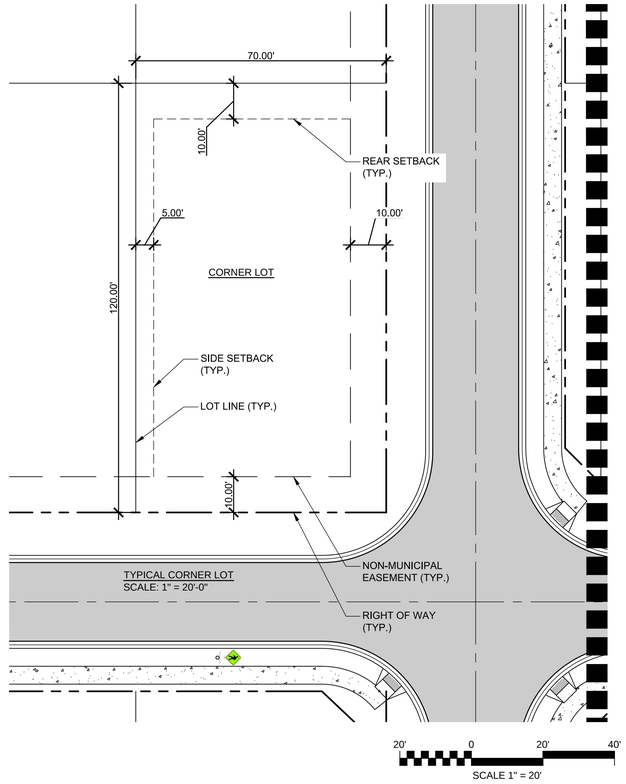

TYPICAL CORNER LOT
SCALE: 1" = 20'-0"

SCALE 1" = 20'

1 TYPICAL LOT DIMENSIONS — SCALE: NTS

REV.NO.	DESCRIPTIONS	DATE
	REVISIONS	

SEAL

SEAL
NORTH CAROLINA PROFESSIONAL ENGINEER SEAL 025503 RICHARD A. MOORE
5/27/2020

McKIM&CREED
243 North Front Street
Wilmington, North Carolina 28401
Phone: (910)343-1048, Fax: (910)251-8282
License: F-1222
www.mckimcreed.com

D·R·HORTON® DHI Listed NYSE
America's Builder

SIDBURY FARMS
NEW HANOVER COUNTY, NORTH CAROLINA
LOT AND STREET TYPICALS

DATE:	02/12/2020
MCE PROJ. #	4245-0012
DRAWN	RAS/JEB
DESIGNED	RAS/JEB
CHECKED	RAM
PROJ. MGR.	RAM

SCALE
HORIZONTAL: AS SHOWN
VERTICAL: N/A

M&C FILE NUMBER: G-005
DRAWING NUMBER: 5

STATUS: TRC SUBMITTAL
REVISION

NC GRID NAD83/2011

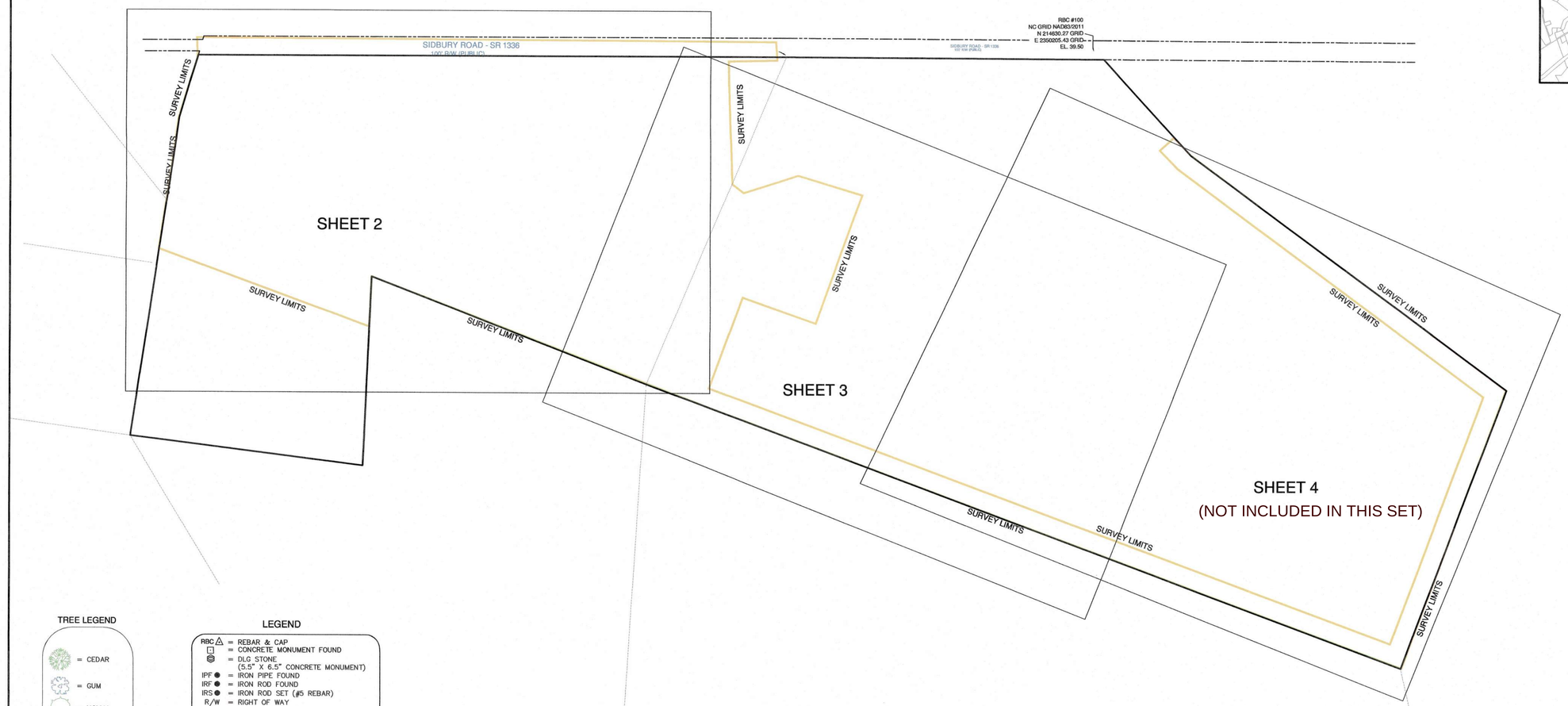

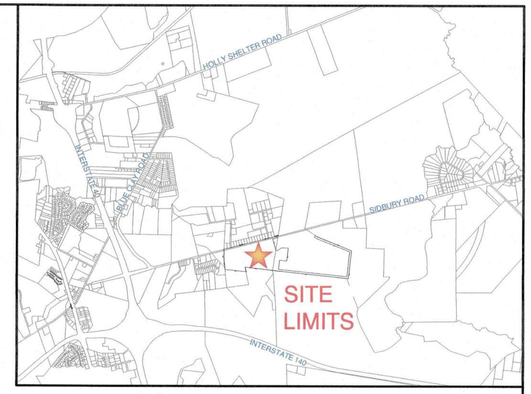

VICINITY MAP – NOT TO SCALE

I, DAVID L. JONES, JR. PLS L-3672, CERTIFY THAT THIS PLAT WAS DRAWN UNDER MY SUPERVISION FROM AN ACTUAL SURVEY MADE UNDER MY SUPERVISION (DEED DESCRIPTION RECORDED IN DEED BOOK 5617 PAGE 442 OR OTHER REFERENCE SOURCE); THAT THE BOUNDARY LINES NOT SURVEYED ARE INDICATED WITH DASHED LINES AS DRAWN FROM INFORMATION IN BOOK 15 PAGE 27 OR OTHER REFERENCE SOURCE; THAT THE POSITIONAL ACCURACY IS 0.035 @ 95%; THAT THIS PLAT MEETS THE REQUIREMENTS OF THE STANDARDS OF PRACTICE FOR LAND SURVEYING IN NORTH CAROLINA (21 NCAC 56. 1600).

THAT THE GPS SURVEY MADE WAS UNDER MY SUPERVISION AND THE FOLLOWING INFORMATION WAS USED TO PERFORM THIS SURVEY.
FOR CONTROL AND TIE ONLY.

CLASS OF SURVEY: CLASS "A" RURAL
POSITIONAL ACCURACY: 0.035 @ 95%
TYPE OF GPS FIELD PROCEDURE: VRS RTK
DATES OF SURVEY: MARCH 2019
DATUM/EPOCH: NC GRID NAD83/2011
PUBLISHED/FIXED-CONTROL USED: TWO CONTROL POINTS ESTABLISHED USING VRS RTK
GEOID MODEL: GEOID 12B
COMBINED GRID FACTOR: 1.00001905
UNITS: U.S. SURVEY FEET

WITNESS MY ORIGINAL SIGNATURE, LICENSE NUMBER, AND SEAL THIS
5th DAY OF MAY AD 2020

DAVID L. JONES, JR.
PROFESSIONAL LAND SURVEYOR L-3672

NORTH CAROLINA PROFESSIONAL SEAL L-3672 LAND SURVEYOR DAVID L. JONES, JR.

SURVEYOR'S NOTES:

1. ALL DISTANCES ARE HORIZONTAL GROUND IN U.S. SURVEY FEET UNLESS OTHERWISE SHOWN.
2. BEARINGS BASED ON NC GRID NAD83/2011.
3. REFERENCES: AS SHOWN ON PLAT.
4. SUBSURFACE AND ENVIRONMENTAL CONDITIONS WERE NOT EXAMINED OR CONSIDERED AS A PART OF THIS SURVEY. NO STATEMENT IS MADE CONCERNING THE EXISTENCE OF UNDERGROUND OR OVERHEAD CONTAINERS OR FACILITIES THAT MAY AFFECT THE USE OR DEVELOPMENT OF THIS TRACT.
5. THE EXISTENCE OR NONEXISTENCE OF WETLANDS ON SUBJECT PROPERTY HAS NOT BEEN DETERMINED BY THIS SURVEY.
6. SUBJECT TO ALL EASEMENTS, RIGHT OF WAYS, AND OR ENCUMBRANCES THAT MAY EFFECT THIS PROPERTY.

   WOOD LINES SHOWN BASED ON NEW HANOVER COUNTY GIS.
7. BEARINGS FOR MAP BOOK 15 PAGE 27 ARE MAGNETIC NORTH.
8. BEARINGS FOR MAP BOOK 20 PAGE 89 ARE GRID NAD83.

SUE NOTES:

THE HORIZONTAL UNDERGROUND UTILITY LINES SHOWN REPRESENT QUALITY LEVEL B SUBSURFACE UTILITY ENGINEERING SERVICES. UTILITY MARKS PLACED ON THE GROUND BY MCKIM & CREED ARE NOT TO BE USED FOR CONSTRUCTION PURPOSES. USE OF THIS INFORMATION DOES NOT RELIEVE ANY PARTY FROM THEIR OBLIGATION TO CONTACT THE UTILITY DAMAGE PREVENTION SYSTEM BEFORE DIGGING BEGINS. THIS QUALITY LEVEL B UTILITY INVENTORY DOES NOT GUARANTEE THE EXISTENCE OF EACH UTILITY OR THAT ALL THE UNDERGROUND UTILITIES HAVE BEEN ACCOUNTED FOR. EXACT HORIZONTAL AND VERTICAL POSITIONS CAN ONLY BE VERIFIED WHERE QUALITY LEVEL A (EXPOSURES) HAVE BEEN PERFORMED. SERVICES WERE PROVIDED IN ACCORDANCE WITH THE STANDARD OF PRACTICE FOR THE SUBSURFACE UTILITY ENGINEERING PROFESSION, AMERICAN SOCIETY OF CIVIL ENGINEERS STANDARD GUIDELINE FOR THE COLLECTION AND DEPICTION OF EXISTING SUBSURFACE UTILITY DATA (CI/ASCE 38-02).

TREE LEGEND

- = CEDAR
- = GUM
- = HOLLY
- = OAK
- = MAGNOLIA
- = MAPLE
- = PINE
- = BIRCH
- = BAY
- = CYPRESS
- 18 = TREE SIZE

LEGEND

- RBC △ = REBAR & CAP
- □ = CONCRETE MONUMENT FOUND
- = DLG STONE (5.5" X 6.5" CONCRETE MONUMENT)
- IPF ● = IRON PIPE FOUND
- IRF ● = IRON ROD FOUND
- IRS ● = IRON ROD SET (#5 REBAR)
- R/W = RIGHT OF WAY
- DB = DEED BOOK
- PG = PAGE
- N/F = NOW/FORMERLY
- = POWER POLE
- = GUY WIRE
- = UNDER GROUND GAS MARKER
- = YARD LIGHT
- = TELEPHONE PEDISTAL
- = MAIL BOX
- V = GAS FINK
- = SIGNS AS LISTED
- = DROP INLET
- = BORE HOLE
- CMP = CORRUGATED METAL PIPE
- RCP = REINFORCED CONCRETE PIPE
- INV = INVERT
- DIP = DUCTILE IRON PIPE
- HW = HEAD WALL
- EOI = END OF INFORMATION
- FESI = FLARED END SECTION INVERT

LINE LEGEND

- = WOOD LINE
- OHE = OVERHEAD ELECTRIC LINES
- E E = UNDERGROUND ELECTRIC LINES
- T = UNDERGROUND TELEPHONE LINES
- TV = UNDERGROUND TV LINES
- UNK = UNKNOWN UTILITY LINES
- G = UNDERGROUND GAS LINE
- = CENTERLINE ROAD
- = EDGE OF PAVEMENT

SCALE: 1" = 300'
0 150 300 600 900

McKIM & CREED
243 NORTH FRONT STREET
WILMINGTON, NORTH CAROLINA 28401
TELEPHONE: (910) 343-1048
FAX: (910) 251-8282
NORTH CAROLINA FIRM LICENSE NUMBER: F-1222

TOPO AND TREE LOCATION 127.5± ACRES
OF
SIDBURY FARM PHASE 1
MAP BOOK 15 PAGE 27 & MAP BOOK 20 PAGE 89
CLIENT: D.R. HORTON INC.
NEW HANOVER COUNTY, NORTH CAROLINA
APRIL 15, 2020

JOB NUMBER:	04245-0013
SCALE:	1" = 300'
CAD NUMBER:	VT-042450013.DWG
PLS:	DLJ
PARTY CHIEF:	JM
CAD TECH:	MBH
FIELD BOOK/PAGE:	
DRAWING NUMBER:	2020-028

NC GRID NAD83/2011

SURVEYOR'S NOTES:

1. ALL DISTANCES ARE HORIZONTAL GROUND IN U.S. SURVEY FEET UNLESS OTHERWISE SHOWN.
2. BEARINGS BASED ON NC GRID NAD83/2011.
3. REFERENCES: AS SHOWN ON PLAT.
4. SUBSURFACE AND ENVIRONMENTAL CONDITIONS WERE NOT EXAMINED OR CONSIDERED AS A PART OF THIS SURVEY. NO STATEMENT IS MADE CONCERNING THE EXISTENCE OF UNDERGROUND OR OVERHEAD CONTAINERS OR FACILITIES THAT MAY AFFECT THE USE OR DEVELOPMENT OF THIS TRACT.
5. THE EXISTENCE OR NONEXISTENCE OF WETLANDS ON SUBJECT PROPERTY HAS NOT BEEN DETERMINED BY THIS SURVEY.
6. SUBJECT TO ALL EASEMENTS, RIGHT OF WAYS, AND OR ENCUMBRANCES THAT MAY EFFECT THIS PROPERTY.

   WOOD LINES SHOWN BASED ON NEW HANOVER COUNTY GIS.
7. BEARINGS FOR MAP BOOK 15 PAGE 27 ARE MAGNETIC NORTH.
8. BEARINGS FOR MAP BOOK 20 PAGE 89 ARE GRID NAD83.

SUE NOTES

THE HORIZONTAL UNDERGROUND UTILITY LINES SHOWN REPRESENT QUALITY LEVEL B SUBSURFACE UTILITY ENGINEERING SERVICES. UTILITY MARKS PLACED ON THE GROUND BY MCKIM & CREED ARE NOT TO BE USED FOR CONSTRUCTION PURPOSES. USE OF THIS INFORMATION DOES NOT RELIEVE ANY PARTY FROM THEIR OBLIGATION TO CONTACT THE UTILITY DAMAGE PREVENTION SYSTEM BEFORE DIGGING BEGINS. THIS QUALITY LEVEL B UTILITY INVENTORY DOES NOT GUARANTEE THE EXISTENCE OF EACH UTILITY OR THAT ALL THE UNDERGROUND UTILITIES HAVE BEEN ACCOUNTED FOR. EXACT HORIZONTAL AND VERTICAL POSITIONS CAN ONLY BE VERIFIED WHERE QUALITY LEVEL A (EXPOSURES) HAVE BEEN PERFORMED. SERVICES WERE PROVIDED IN ACCORDANCE WITH THE STANDARD OF PRACTICE FOR THE SUBSURFACE UTILITY ENGINEERING PROFESSION, AMERICAN SOCIETY OF CIVIL ENGINEERS STANDARD GUIDELINE FOR THE COLLECTION AND DEPICTION OF EXISTING SUBSURFACE UTILITY DATA (CI/ASCE 38-02).

NORTH CAROLINA PROFESSIONAL SEAL L-3672 LAND SURVEYOR DAVID L. JONES, JR. 5-5-2020

TREE LEGEND

- CEDAR
- GUM
- HOLLY
- OAK
- MAGNOLIA
- MAPLE
- PINE
- BIRCH
- BAY
- CYPRESS
- 18 = TREE SIZE

LEGEND

- RBC △ = REBAR & CAP
- □ = CONCRETE MONUMENT FOUND
- ▤ = DLG STONE (5.5" X 6.5" CONCRETE MONUMENT)
- IPF ● = IRON PIPE FOUND
- IRF ● = IRON ROD FOUND
- IRS ● = IRON ROD SET (#5 REBAR)
- R/W = RIGHT OF WAY
- DB = DEED BOOK
- PG = PAGE
- N/F = NOW/FORMERLY
- = POWER POLE
- = GUY WIRE
- = UNDER GROUND GAS MARKER
- = YARD LIGHT
- = TELEPHONE PEDISTAL
- = MAIL BOX
- V = GAS FINK
- = SIGNS AS LISTED
- = DROP INLET
- TP = BORE HOLE
- CMP = CORRUGATED METAL PIPE
- RCP = REINFORCED CONCRETE PIPE
- INV = INVERT
- DIP = DUCTILE IRON PIPE
- HW = HEAD WALL
- EOI = END OF INFORMATION
- FESI = FLARED END SECTION INVERT

LINE LEGEND

- = WOOD LINE
- OHE = OVERHEAD ELECTRIC LINES
- E E = UNDERGROUND ELECTRIC LINES
- T = UNDERGROUND TELEPHONE LINES
- TV = UNDERGROUND TV LINES
- UNK = UNKNOWN UTILITY LINES
- G = UNDERGROUND GAS LINE
- = CENTERLINE ROAD
- = EDGE OF PAVEMENT

SCALE: 1" = 100'
0 50 100 200 300

McKIM&CREED
243 NORTH FRONT STREET
WILMINGTON, NORTH CAROLINA 28401
TELEPHONE: (910) 343-1048
FAX: (910) 251-8282
NORTH CAROLINA FIRM LICENSE NUMBER: F-1222

TOPO AND TREE LOCATION 127.5± ACRES
OF
SIDBURY FARM PHASE 1
MAP BOOK 15 PAGE 27 & MAP BOOK 20 PAGE 89
CLIENT: D.R. HORTON INC.
NEW HANOVER COUNTY, NORTH CAROLINA
APRIL 15, 2020

JOB NUMBER:	04245-0013
SCALE:	1" = 100'
CAD NUMBER:	VT-042450013.DWG
PLS:	DLJ
PARTY CHIEF:	JM
CAD TECH:	MBH
FIELD BOOK/PAGE:	
DRAWING NUMBER:	2020-028

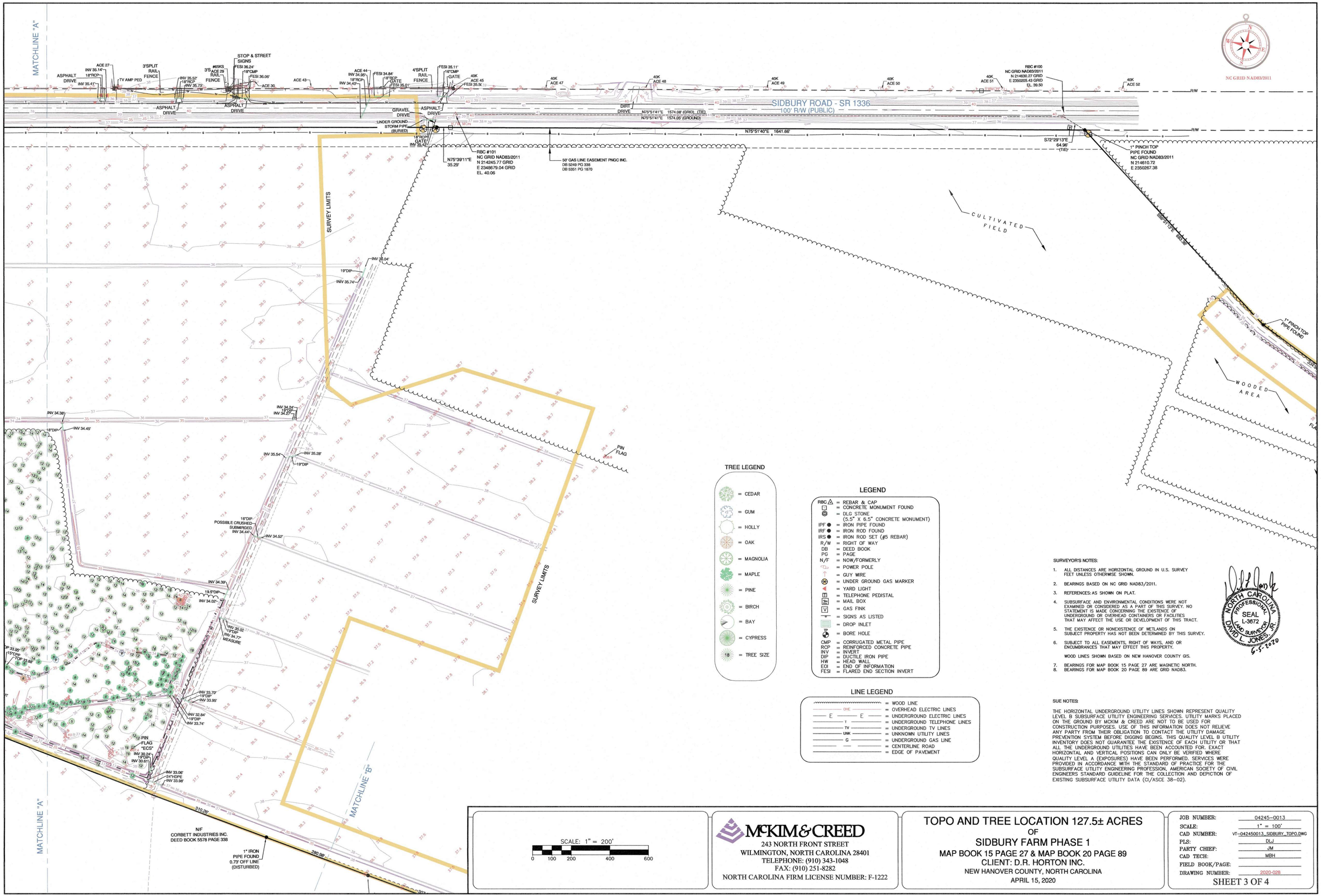

TREE LEGEND

- CEDAR
- GUM
- HOLLY
- OAK
- MAGNOLIA
- MAPLE
- PINE
- BIRCH
- BAY
- CYPRESS
- 18 = TREE SIZE

LEGEND

- RBC △ = REBAR & CAP
- □ = CONCRETE MONUMENT FOUND
- = DLG STONE (5.5" X 6.5" CONCRETE MONUMENT)
- IPF ● = IRON PIPE FOUND
- IRF ● = IRON ROD FOUND
- IRS ● = IRON ROD SET (#5 REBAR)
- R/W = RIGHT OF WAY
- DB = DEED BOOK
- PG = PAGE
- N/F = NOW/FORMERLY
- = POWER POLE
- = GUY WIRE
- = UNDER GROUND GAS MARKER
- = YARD LIGHT
- = TELEPHONE PEDISTAL
- = MAIL BOX
- V = GAS FINK
- = SIGNS AS LISTED
- = DROP INLET
- TP = BORE HOLE
- CMP = CORRUGATED METAL PIPE
- RCP = REINFORCED CONCRETE PIPE
- INV = INVERT
- DIP = DUCTILE IRON PIPE
- HW = HEAD WALL
- EOI = END OF INFORMATION
- FESI = FLARED END SECTION INVERT

LINE LEGEND

- = WOOD LINE
- OHE = OVERHEAD ELECTRIC LINES
- E = UNDERGROUND ELECTRIC LINES
- T = UNDERGROUND TELEPHONE LINES
- TV = UNDERGROUND TV LINES
- UNK = UNKNOWN UTILITY LINES
- G = UNDERGROUND GAS LINE
- = CENTERLINE ROAD
- = EDGE OF PAVEMENT

SURVEYOR'S NOTES:

1. ALL DISTANCES ARE HORIZONTAL GROUND IN U.S. SURVEY FEET UNLESS OTHERWISE SHOWN.
2. BEARINGS BASED ON NC GRID NAD83/2011.
3. REFERENCES: AS SHOWN ON PLAT.
4. SUBSURFACE AND ENVIRONMENTAL CONDITIONS WERE NOT EXAMINED OR CONSIDERED AS A PART OF THIS SURVEY. NO STATEMENT IS MADE CONCERNING THE EXISTENCE OF UNDERGROUND OR OVERHEAD CONTAINERS OR FACILITIES THAT MAY AFFECT THE USE OR DEVELOPMENT OF THIS TRACT.
5. THE EXISTENCE OR NONEXISTENCE OF WETLANDS ON SUBJECT PROPERTY HAS NOT BEEN DETERMINED BY THIS SURVEY.
6. SUBJECT TO ALL EASEMENTS, RIGHT OF WAYS, AND OR ENCUMBRANCES THAT MAY EFFECT THIS PROPERTY.

   WOOD LINES SHOWN BASED ON NEW HANOVER COUNTY GIS.
7. BEARINGS FOR MAP BOOK 15 PAGE 27 ARE MAGNETIC NORTH.
8. BEARINGS FOR MAP BOOK 20 PAGE 89 ARE GRID NAD83.

NORTH CAROLINA PROFESSIONAL SEAL L-3672 DAVID L. JONES, JR. REGISTERED LAND SURVEYOR 5-5-2020

SUE NOTES:

THE HORIZONTAL UNDERGROUND UTILITY LINES SHOWN REPRESENT QUALITY LEVEL B SUBSURFACE UTILITY ENGINEERING SERVICES. UTILITY MARKS PLACED ON THE GROUND BY MCKIM & CREED ARE NOT TO BE USED FOR CONSTRUCTION PURPOSES. USE OF THIS INFORMATION DOES NOT RELIEVE ANY PARTY FROM THEIR OBLIGATION TO CONTACT THE UTILITY DAMAGE PREVENTION SYSTEM BEFORE DIGGING BEGINS. THIS QUALITY LEVEL B UTILITY INVENTORY DOES NOT GUARANTEE THE EXISTENCE OF EACH UTILITY OR THAT ALL THE UNDERGROUND UTILITIES HAVE BEEN ACCOUNTED FOR. EXACT HORIZONTAL AND VERTICAL POSITIONS CAN ONLY BE VERIFIED WHERE QUALITY LEVEL A (EXPOSURES) HAVE BEEN PERFORMED. SERVICES WERE PROVIDED IN ACCORDANCE WITH THE STANDARD OF PRACTICE FOR THE SUBSURFACE UTILITY ENGINEERING PROFESSION, AMERICAN SOCIETY OF CIVIL ENGINEERS STANDARD GUIDELINE FOR THE COLLECTION AND DEPICTION OF EXISTING SUBSURFACE UTILITY DATA (CI/ASCE 38-02).

SCALE: 1" = 200'
0 100 200 400 600

McKIM&CREED
243 NORTH FRONT STREET
WILMINGTON, NORTH CAROLINA 28401
TELEPHONE: (910) 343-1048
FAX: (910) 251-8282
NORTH CAROLINA FIRM LICENSE NUMBER: F-1222

TOPO AND TREE LOCATION 127.5± ACRES
OF
SIDBURY FARM PHASE 1
MAP BOOK 15 PAGE 27 & MAP BOOK 20 PAGE 89
CLIENT: D.R. HORTON INC.
NEW HANOVER COUNTY, NORTH CAROLINA
APRIL 15, 2020

JOB NUMBER:	04245-0013
SCALE:	1" = 100'
CAD NUMBER:	VT-042450013_SIDBURY_TOPO.DWG
PLS:	DLJ
PARTY CHIEF:	JM
CAD TECH:	MBH
FIELD BOOK/PAGE:	
DRAWING NUMBER:	2020-028

LEGEND

RC	=	REBAR AND CAP
MNS	=	MAG NAIL SET
PKF	=	PK NAIL FOUND
NS	=	60D NAIL SET
●IPF	=	IRON PIPE FOUND
●IRF	=	IRON ROD FOUND
▲	=	R/W DISC
Ⓢ	=	SANITARY SEWER MANHOLE
⋈	=	WATER VALVE
	=	FIRE HYDRANT
STUB	=	3.5" PVC PIPE
R/W	=	RIGHT OF WAY
DB	=	DEED BOOK
PG	=	PAGE
N/F	=	NOW/FORMERLY
CPP	=	CORRUGATED PLASTIC PIPE
RCP	=	REINFORCED CONCRETE PIPE
DIP	=	DUCTILE IRON PIPE
INV.	=	INVERT
25.0	=	GROUND SHOT ELEVATION

CENTERLINE
RIGHT OF WAY
STORM PIPE
SEWER LINE
R/W FENCE
RIPRAP
WOODS LINE

TOTAL DISTURBED AREA =84.33 ACRES

SIDBURY ROAD (SR 1336)
(100' PUBLIC R/W)

TEMPORARY SILT FENCE (SF 1) SEE DETAIL; SHEET CE-501

TEMPORARY CONSTRUCTION ENTRANCE SEE DETAIL; CE-501

TEMPORARY SILT FENCE (SF 2) SEE DETAIL; SHEET CE-501

TEMPORARY CONSTRUCTION ENTRANCE SEE DETAIL; CE-501

TEMPORARY SILT FENCE (SF 3) SEE DETAIL; SHEET CE-501

LIMITS OF DISTURBANCE

PROJECT BOUNDARY

EXISTING TREE LINE

TEMPORARY SILT FENCE (SF 8) SEE DETAIL; SHEET CE-501

N/F
JACK L. JAMES
& ELIZABETH J. JAMES
DEED BOOK 2727 PAGE

N/F
TERRY L. CRUSE AND WIFE,
JACQUELINE R. CRUSE
DEED BOOK 2226 PAGE 39

N/F
LINDSAY DEAN
DEED BOOK 6040 PAGE 2172

404 WETLANDS

PRINCE GEORGE CREEK

TEMPORARY SILT FENCE (SF 7) (DOUBLE ROW) SEE DETAIL; SHEET CE-501

TEMPORARY SILT FENCE (SF 6) (DOUBLE ROW) SEE DETAIL; SHEET CE-501

N/F
NC DEPT OF TRANSPORTATION
DEED BOOK 3099 PAGE 344

TEMPORARY SILT FENCE (SF 5) (DOUBLE ROW) SEE DETAIL; SHEET CE-501

RIPRAP OUTLET PROTECTION (TYP)

TEMPORARY SILT FENCE (SF 4) (DOUBLE ROW) SEE DETAIL; SHEET CE-501

N/F
CORBIN INDUS
DEED BOOK 557

N

120' 0 120' 240'
SCALE 1" = 120'

KEY MAP
SCALE: NTS

TREE LEGEND

- = CHERRY
- = GUM
- = OAK
- = MAGNOLIA
- = MAPLE
- = PINE
- = POPLAR
- = SYCAMORE
- = PRIVET
- = EMPRESS
- = SIZE OF TREE

TREE REMOVAL PLAN

1. TREE REMOVAL WILL INVOLVE CLEARING OF THE VEGETATION UNDER THE ESSENTIAL SITE IMPROVEMENTS.

DEMOLITION NOTES

1. NO EARTH DISTURBING ACTIVITIES SHALL COMMENCE UNTIL ALL PERIMETER EROSION CONTROL MEASURES ARE IN PLACE IN ACCORDANCE WITH THE EROSION CONTROL SEQUENCE SHOWN IN THESE PLANS.
2. NO EARTH-DISTURBING ACTIVITY OR OTHER WORK SHALL TAKE PLACE WITHIN WETLANDS AREAS NOTED ON SURVEY. CONTRACTOR SHALL FIELD VERIFY WETLAND LIMITS FLAGGING IN PLACE AND SHALL NOT ENTER WETLAND AREAS. IF WETLAND FLAGGING IS MISSING OR OTHERWISE DAMAGES, IT IS THE CONTRACTOR'S RESPONSIBILITY TO NOTE WETLAND LIMITS AND PREVENT DISTURBANCE OR OTHER ACTIVITY WITHIN WETLANDS.

2. THE CONTRACTOR SHALL ASSUME RESPONSIBILITY FOR THE PROTECTION OF ALL PROPERTY CORNER MONUMENTS, AND SHALL HAVE, AT HIS EXPENSE, ALL CORNER MONUMENTS REPLACED WHICH ARE DISTURBED BY CONSTRUCTION ACTIVITIES.

3. CONTRACTOR IS RESPONSIBLE FOR REPAIRS OF DAMAGE TO ANY EXISTING IMPROVEMENTS, AT HIS EXPENSE, DURING CONSTRUCTION, SUCH AS, BUT NOT LIMITED TO, DRAINAGE, UTILITIES, PAVEMENT, STRIPING, CURB, ETC. REPAIRS SHALL BE EQUAL TO OR BETTER THAN EXISTING CONDITIONS.

4. CONTRACTOR SHALL COMPLY TO THE FULLEST EXTEND WITH ALL REGULATIONS GOVERNING THE DEMOLITION, REMOVAL, TRANSPORTATION AND DISPOSAL OF ALL DEMOLITION DEBRIS.

5. CONTRACTOR SHALL COMPLY TO THE FULLEST EXTENT WITH THE LATEST OSHA STANDARDS FOR EXCAVATION AND TRENCHING PROCEDURES. CONTRACTOR SHALL USE SUPPORT SYSTEMS, SLOPING, BENCHING, ETC. AS NECESSARY FOR THESE OPERATIONS, AND SHALL COMPLY WITH ALL OSHA PERFORMANCE CRITERIA.

6. CONTRACTOR SHALL TAKE SPECIAL CARE TO PROTECT ALL UTILITIES AND APPURTENANCES TO REMAIN.

REV.NO.	DESCRIPTIONS	DATE
	REVISIONS	

SEAL

SEAL
NORTH CAROLINA PROFESSIONAL
SEAL 025503
ENGINEER
RICHARD A. MOORE
5/27/2020

McKIM&CREED
243 North Front Street
Wilmington, North Carolina 28401
Phone: (910)343-1048, Fax: (910)251-8282
License: F-1222
www.mckimcreed.com

D·R·HORTON® DHI Listed NYSE
America's Builder

SIDBURY FARMS

NEW HANOVER COUNTY, NORTH CAROLINA

TREE REMOVAL PLAN

DATE:	02/12/2020
MCE PROJ. #	4245-0012
DRAWN	RAS/JEB
DESIGNED	RAS/JEB
CHECKED	RAM
PROJ. MGR.	RAM

SCALE
HORIZONTAL: 1"=120'
VERTICAL: N/A

M&C FILE NUMBER CX-104
DRAWING NUMBER 9

STATUS: TRC SUBMITTAL
REVISION

LEGEND

- TEMPORARY CONSTRUCTION ENTRANCE
- LIMITS OF DISTURBANCE — LOD —
- TEMPORARY SILT FENCE — SF —
- TEMPORARY DIVERSION DITCH — >TDD —
- TEMPORARY PERIMETER DIKE
- WATTLE / CHECK DAM
- RIPRAP OUTLET PAD
- DISCHARGE PIPE
- FAIRCLOTH SKIMMER
- EXISTING WETLANDS
- PROJECT BOUNDARY

NOTE:

- SILT FENCE TO BE PLACED AT LIMITS OF DISTURBANCE AND HAS BEEN SHOWN AS AN OFFSET FOR CLARITY.
- WATTLE / CHECK DAMS TO BE PLACED EVERY 200 LF IN PERMANENT DIVERSION DITCH.
- WETLAND INFORMATION BASED ON THE DELINEATION PROGRESS SKETCH – WETLANDS FLAGGED AS OF 11.30.18, PREPARED BY LAND MANAGEMENT GROUP.

TOTAL DISTURBED AREA =84.33 ACRES

SIDBURY ROAD (SR 1336)
(100' PUBLIC R/W)

LIMITS OF DISTURBANCE

PROJECT BOUNDARY

TEMPORARY SILT FENCE (SF 1)
SEE DETAIL;
SHEET CE–501

TEMPORARY CONSTRUCTION ENTRANCE
SEE DETAIL; SHEET CE–501

TEMPORARY SILT FENCE (SF 2)
SEE DETAIL;
SHEET CE–501

TEMPORARY CONSTRUCTION ENTRANCE
SEE DETAIL; SHEET CE–501

TEMPORARY SILT FENCE (SF 3)
SEE DETAIL;
SHEET CE–501

LIMITS OF DISTURBANCE

TEMPORARY SILT FENCE (SF 8)
SEE DETAIL;
SHEET CE–501

TEMPORARY DIVERSION DITCH (TDD–7)
SEE DETAIL; SHEET CE–501

TEMPORARY DIVERSION DITCH (TDD–1)
SEE DETAIL; SHEET CE–501

TEMPORARY DIVERSION DITCH (TDD–2)
SEE DETAIL; SHEET CE–501

TEMPORARY DIVERSION DITCH (TDD–4)
SEE DETAIL; SHEET CE–501

TEMPORARY DIVERSION DITCH (TDD–3)
SEE DETAIL; SHEET CE–501

TSB–1

TSB–2

TSB–3

TSB–4

SKIMMER AND OUTLET STRUCTURE (TYP.)

RIPRAP OUTLET PROTECTION (TYP)

PLUNGED DITCH AT SKIMMER BASIN

PLUNGED DITCH AT SKIMMER BASIN

TEMPORARY DIVERSION DITCH (TDD–6)
SEE DETAIL; SHEET CE–501

TEMPORARY DIVERSION DITCH (TDD–5)
SEE DETAIL; SHEET CE–501

EXISTING DITCH

TEMPORARY PERIMETER DIKE (PD–1)
SEE DETAIL; SHEET CE–501

LIMITS OF DISTURBANCE

EXISTING DITCH

TEMPORARY PERIMETER DIKE (PD–1)

OUTLET PROTECTION

TEMPORARY SILT FENCE (SF 6)
(DOUBLE ROW)
SEE DETAIL;
SHEET CE–501

TEMPORARY SILT FENCE (SF 5)
(DOUBLE ROW)
SEE DETAIL;
SHEET CE–501

TEMPORARY SILT FENCE (SF 7)
(DOUBLE ROW)
SEE DETAIL;
SHEET CE–501

TEMPORARY SILT FENCE (SF 4)
(DOUBLE ROW)
SEE DETAIL;
SHEET CE–501

404 WETLANDS

PRINCE GEORGE CREEK

RIPRAP OUTLET PROTECTION (TYP)

SKIMMER AND OUTLET STRUCTURE (TYP.)

N

60' 0 60' 120'

SCALE 1" = 60'

KEY MAP
SCALE: NTS

REV.NO.	DESCRIPTIONS REVISIONS	DATE

SEAL

SEAL
NORTH CAROLINA PROFESSIONAL ENGINEER SEAL 025503 RICHARD A. MOORE
5/27/2020

McKIM&CREED
243 North Front Street
Wilmington, North Carolina 28401
Phone: (910)343–1048, Fax: (910)251–8282
License: F–1222
www.mckimcreed.com

D·R·HORTON® DHI Listed NYSE
America's Builder

SIDBURY FARMS

NEW HANOVER COUNTY, NORTH CAROLINA

OVERALL EROSION AND SEDIMENT CONTROL PLAN - PHASE 1

DATE:	02/12/2020
MCE PROJ. #	4245–0012
DRAWN	RAS/JEB
DESIGNED	RAS/JEB
CHECKED	RAM
PROJ. MGR.	RAM

SCALE
HORIZONTAL: 1"=150'
VERTICAL: N/A

M&C FILE NUMBER: CE-100
DRAWING NUMBER: 10

STATUS: TRC SUBMITTAL
REVISION

SIDBURY ROAD (SR 1336)
(100' PUBLIC R/W)

GAS TEST STATION

50' GAS LINE EASEMENT
DB 5249 PG 338
DB 5351 PG 1870

LIMITS OF DISTURBANCE

PROJECT BOUNDARY

TEMPORARY SILT FENCE (SF 1) SEE DETAIL; SHEET CE-501

TEMPORARY CONSTRUCTION ENTRANCE SEE DETAIL; CE-501

TEMPORARY DIVERSION DITCH (TDD-7) SEE DETAIL; SHEET CE-501

TEMPORARY SILT FENCE (SF 8) SEE DETAIL; SHEET CE-501

TSB-1

TEMPORARY DIVERSION DITCH (TDD-1) SEE DETAIL; SHEET CE-501

TEMPORARY DIVERSION DITCH (TDD-2) SEE DETAIL; SHEET CE-501

TSB-2

MATCHLINE SEE SHEET CE-102

SKIMMER AND OUTLET STRUCTURE (TYP.)

PLUNGED DITCH AT SKIMMER BASIN

RIPRAP OUTLET PROTECTION (TYP)

TEMPORARY SILT FENCE (SF 6) (DOUBLE ROW) SEE DETAIL; SHEET CE-501

404 WETLANDS

TEMPORARY SILT FENCE (SF 7) (DOUBLE ROW) SEE DETAIL; SHEET CE-501

PRINCE GEORGE CREEK

LEGEND

- TEMPORARY CONSTRUCTION ENTRANCE
- LIMITS OF DISTURBANCE — LOD —
- TEMPORARY SILT FENCE — SF —
- TEMPORARY DIVERSION DITCH — >TDD —
- TEMPORARY PERIMETER DIKE
- WATTLE / CHECK DAM
- RIPRAP OUTLET PAD
- DISCHARGE PIPE
- FAIRCLOTH SKIMMER
- EXISTING WETLANDS
- PROJECT BOUNDARY

NOTE:

- SILT FENCE TO BE PLACED AT LIMITS OF DISTURBANCE AND HAS BEEN SHOWN AS AN OFFSET FOR CLARITY.
- WATTLE / CHECK DAMS TO BE PLACED EVERY 200 LF IN PERMANENT DIVERSION DITCH.
- WETLAND INFORMATION BASED ON THE DELINEATION PROGRESS SKETCH – WETLANDS FLAGGED AS OF 11.30.18, PREPARED BY LAND MANAGEMENT GROUP.

TOTAL DISTURBED AREA =84.33 ACRES

N

60' 0 60' 120'
SCALE 1" = 60'

KEY MAP
SCALE: NTS

REV.NO.	DESCRIPTIONS	DATE
	REVISIONS	

SEAL

SEAL
NORTH CAROLINA PROFESSIONAL ENGINEER SEAL 025503 RICHARD A. MOORE
5/27/2020

McKIM & CREED
243 North Front Street
Wilmington, North Carolina 28401
Phone: (910)343-1048, Fax: (910)251-8282
License: F-1222
www.mckimcreed.com

D·R·HORTON® DHI Listed NYSE
America's Builder

SIDBURY FARMS

NEW HANOVER COUNTY, NORTH CAROLINA

ENLARGED EROSION AND SEDIMENT CONTROL PLAN - PHASE 1

DATE:	02/12/2020
MCE PROJ. #	4245-0012
DRAWN	RAS/JEB
DESIGNED	RAS/JEB
CHECKED	RAM
PROJ. MGR.	RAM

SCALE
HORIZONTAL: 1"=60'
VERTICAL: N/A

M&C FILE NUMBER: CE-101
DRAWING NUMBER: 11

STATUS: TRC SUBMITTAL
REVISION

SIDBURY ROAD (SR 1336)
(100' PUBLIC R/W)

TEMPORARY
SILT FENCE (SF 2)
SEE DETAIL;
SHEET CE-501

TEMPORARY CONSTRUCTION
ENTRANCE
SEE DETAIL; CE-501

TEMPORARY
SILT FENCE (SF 3)
SEE DETAIL;
SHEET CE-501

LIMITS OF
DISTURBANCE

MATCHLINE
SEE SHEET CE-101

PLUNGED DITCH AT
SKIMMER BASIN

TEMPORARY DIVERSION DITCH (TDD-3)
SEE DETAIL; SHEET CE-501

TEMPORARY DIVERSION DITCH (TDD-4)
SEE DETAIL; SHEET CE-501

TEMPORARY DIVERSION DITCH (TDD-6)
SEE DETAIL; SHEET CE-501

TEMPORARY DIVERSION DITCH (TDD-5)
SEE DETAIL; SHEET CE-501

TSB-3

MATCHLINE
SEE SHEET CE-103

LEGEND

- TEMPORARY CONSTRUCTION ENTRANCE
- LIMITS OF DISTURBANCE — LOD
- TEMPORARY SILT FENCE — SF
- TEMPORARY DIVERSION DITCH — >TDD
- TEMPORARY PERIMETER DIKE
- WATTLE / CHECK DAM
- RIPRAP OUTLET PAD
- DISCHARGE PIPE
- FAIRCLOTH SKIMMER
- EXISTING WETLANDS
- PROJECT BOUNDARY

NOTE:

- SILT FENCE TO BE PLACED AT LIMITS OF DISTURBANCE AND HAS BEEN SHOWN AS AN OFFSET FOR CLARITY.
- WATTLE / CHECK DAMS TO BE PLACED EVERY 200 LF IN PERMANENT DIVERSION DITCH.
- WETLAND INFORMATION BASED ON THE DELINEATION PROGRESS SKETCH – WETLANDS FLAGGED AS OF 11.30.18, PREPARED BY LAND MANAGEMENT GROUP.

TOTAL DISTURBED AREA =84.33 ACRES

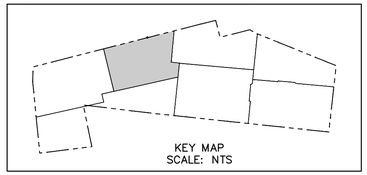

KEY MAP
SCALE: NTS

N

60' 0 60' 120'

SCALE 1" = 60'

REV.NO.	DESCRIPTIONS	DATE

REVISIONS

SEAL

SEAL
NORTH CAROLINA PROFESSIONAL ENGINEER SEAL 025503 RICHARD A. MOORE
5/27/2020

McKIM&CREED
243 North Front Street
Wilmington, North Carolina 28401
Phone: (910)343-1048, Fax: (910)251-8282
License: F-1222
www.mckimcreed.com

D·R·HORTON® DHI Listed NYSE
America's Builder

SIDBURY FARMS

NEW HANOVER COUNTY, NORTH CAROLINA

ENLARGED EROSION AND SEDIMENT CONTROL PLAN - PHASE 1

DATE:	02/12/2020
MCE PROJ. #	4245-0012
DRAWN	RAS/JEB
DESIGNED	RAS/JEB
CHECKED	RAM
PROJ. MGR.	RAM

SCALE
HORIZONTAL: 1"=60'
VERTICAL: N/A

M&C FILE NUMBER CE-102
DRAWING NUMBER 12

STATUS: TRC SUBMITTAL
REVISION

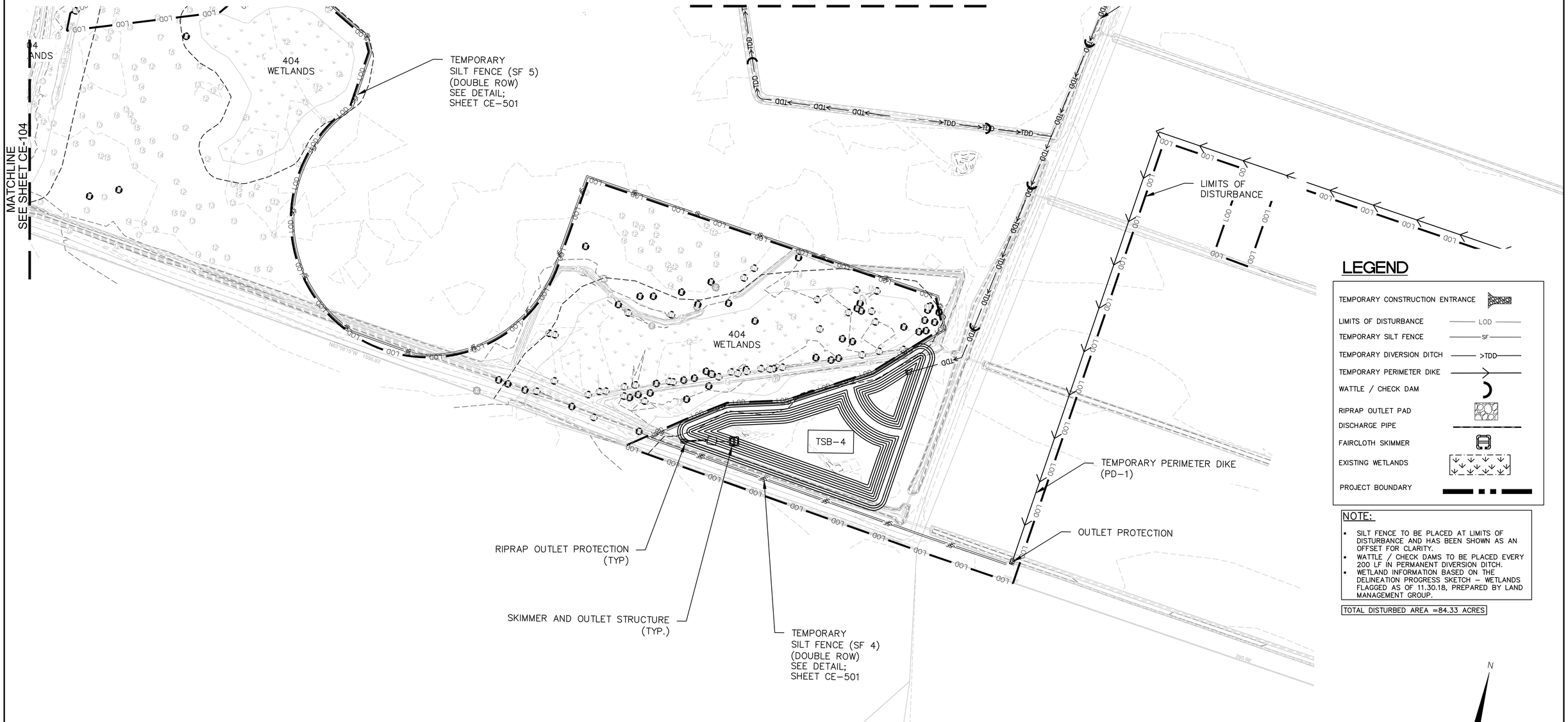

LEGEND

- TEMPORARY CONSTRUCTION ENTRANCE
- LIMITS OF DISTURBANCE — LOD —
- TEMPORARY SILT FENCE — SF —
- TEMPORARY DIVERSION DITCH — >TDD —
- TEMPORARY PERIMETER DIKE
- WATTLE / CHECK DAM
- RIPRAP OUTLET PAD
- DISCHARGE PIPE
- FAIRCLOTH SKIMMER
- EXISTING WETLANDS
- PROJECT BOUNDARY

NOTE:

- SILT FENCE TO BE PLACED AT LIMITS OF DISTURBANCE AND HAS BEEN SHOWN AS AN OFFSET FOR CLARITY.
- WATTLE / CHECK DAMS TO BE PLACED EVERY 200 LF IN PERMANENT DIVERSION DITCH.
- WETLAND INFORMATION BASED ON THE DELINEATION PROGRESS SKETCH – WETLANDS FLAGGED AS OF 11.30.18, PREPARED BY LAND MANAGEMENT GROUP.

TOTAL DISTURBED AREA =84.33 ACRES

N

60' 0 60' 120'

SCALE 1" = 60'

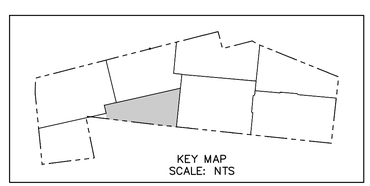

REV.NO.	DESCRIPTIONS	DATE
	REVISIONS	

SEAL

SEAL

NORTH CAROLINA PROFESSIONAL SEAL 025503 ENGINEER RICHARD A. MOORE
5/27/2020

McKIM&CREED
243 North Front Street
Wilmington, North Carolina 28401
Phone: (910)343-1048, Fax: (910)251-8282
License: F-1222
www.mckimcreed.com

D·R·HORTON® DHI Listed NYSE
America's Builder

SIDBURY FARMS

NEW HANOVER COUNTY, NORTH CAROLINA

ENLARGED SEDIMENT AND EROSION CONTROL PLAN - PHASE 1

DATE:	02/12/2020
MCE PROJ. #	4245-0012
DRAWN	RAS/JEB
DESIGNED	RAS/JEB
CHECKED	RAM
PROJ. MGR.	RAM

SCALE
HORIZONTAL: 1"=60'
VERTICAL: N/A

M&C FILE NUMBER CE-103
DRAWING NUMBER 13

STATUS: TRC SUBMITTAL
REVISION

LEGEND

- TEMPORARY CONSTRUCTION ENTRANCE
- LIMITS OF DISTURBANCE — LOD —
- TEMPORARY SILT FENCE — SF —
- TEMPORARY DIVERSION DITCH — >TDD —
- TEMPORARY PERIMETER DIKE
- WATTLE / CHECK DAM
- RIPRAP OUTLET PAD
- DISCHARGE PIPE
- FAIRCLOTH SKIMMER
- EXISTING WETLANDS
- PROJECT BOUNDARY

NOTE:

- SILT FENCE TO BE PLACED AT LIMITS OF DISTURBANCE AND HAS BEEN SHOWN AS AN OFFSET FOR CLARITY.
- WATTLE / CHECK DAMS TO BE PLACED EVERY 200 LF IN PERMANENT DIVERSION DITCH.
- WETLAND INFORMATION BASED ON THE DELINEATION PROGRESS SKETCH – WETLANDS FLAGGED AS OF 11.30.18, PREPARED BY LAND MANAGEMENT GROUP.

TOTAL DISTURBED AREA =84.33 ACRES

SIDBURY ROAD (SR 1336)
(100' PUBLIC R/W)

LIMITS OF DISTURBANCE

PROJECT BOUNDARY

MAINTAIN EXISTING SILT FENCE (SF 8) SEE DETAIL; SHEET CE-501

MAINTAIN EXISTING SILT FENCE (SF 1) SEE DETAIL; SHEET CE-501

TEMPORARY CONSTRUCTION ENTRANCE SEE DETAIL; CE-501

MAINTAIN EXISTING SILT FENCE (SF 2) SEE DETAIL; SHEET CE-501

INLET PROTECTION (TYP.)

TEMPORARY CONSTRUCTION ENTRANCE SEE DETAIL; CE-501

MAINTAIN EXISTING SILT FENCE (SF 3) SEE DETAIL; SHEET CE-501

LIMITS OF DISTURBANCE

TSB-1

TSB-2

TSB-3

TSB-4

SKIMMER AND OUTLET STRUCTURE (TYP.)

RIPRAP OUTLET PROTECTION (TYP)

404 WETLANDS

PRINCE GEORGE CREEK

MAINTAIN TEMPORARY SILT FENCE (SF 7) (DOUBLE ROW) SEE DETAIL; SHEET CE-501

MAINTAIN EXISTING SILT FENCE (SF 6) (DOUBLE ROW) SEE DETAIL; SHEET CE-501

MAINTAIN EXISTING SILT FENCE (SF 5) (DOUBLE ROW) SEE DETAIL; SHEET CE-501

INLET PROTECTION (TYP.)

MAINTAIN EXISTING TEMPORARY PERIMETER DIKE (PD-1) SEE DETAIL; SHEET CE-501

LIMITS OF DISTURBANCE

MAINTAIN EXISTING TEMPORARY PERIMETER DIKE (PD-1)

OUTLET PROTECTION

RIPRAP OUTLET PROTECTION (TYP)

SKIMMER AND OUTLET STRUCTURE (TYP.)

TEMPORARY SILT FENCE (SF 4) (DOUBLE ROW) SEE DETAIL; SHEET CE-501

N

60' 0 60' 120'

SCALE 1" = 60'

KEY MAP
SCALE: NTS

REV.NO.	DESCRIPTIONS	DATE
	REVISIONS	

SEAL

SEAL
NORTH CAROLINA PROFESSIONAL ENGINEER SEAL 025503 RICHARD A. MOORE
5/27/2020

McKIM & CREED
243 North Front Street
Wilmington, North Carolina 28401
Phone: (910)343-1048, Fax: (910)251-8282
License: F-1222
www.mckimcreed.com

D·R·HORTON® DHI Listed NYSE
America's Builder

SIDBURY FARMS

NEW HANOVER COUNTY, NORTH CAROLINA

OVERALL EROSION AND SEDIMENT CONTROL PLAN - PHASE 2

DATE:	02/12/2020
MCE PROJ. #	4245-0012
DRAWN	RAS/JEB
DESIGNED	RAS/JEB
CHECKED	RAM
PROJ. MGR.	RAM

SCALE
HORIZONTAL: 1"=150'
VERTICAL: N/A

M&C FILE NUMBER: CE-104
DRAWING NUMBER: 14

STATUS: TRC SUBMITTAL
REVISION

SIDBURY ROAD (SR 1336)
(100' PUBLIC R/W)

LIMITS OF DISTURBANCE

PROJECT BOUNDARY

MAINTAIN EXISTING SILT FENCE (SF 8) SEE DETAIL; SHEET CE-501

MAINTAIN EXISTING SILT FENCE (SF 1) SEE DETAIL; SHEET CE-501

TEMPORARY CONSTRUCTION ENTRANCE SEE DETAIL; CE-501

INLET PROTECTION (TYP.)

TSB-1

TSB-2

SKIMMER AND OUTLET STRUCTURE (TYP.)

RIPRAP OUTLET PROTECTION (TYP)

404 WETLANDS

PRINCE GEORGE CREEK

MAINTAIN TEMPORARY SILT FENCE (SF 7) (DOUBLE ROW) SEE DETAIL; SHEET CE-501

MAINTAIN EXISTING SILT FENCE (SF 6) (DOUBLE ROW) SEE DETAIL; SHEET CE-501

MATCHLINE SEE SHEET CE-106

LEGEND

- TEMPORARY CONSTRUCTION ENTRANCE
- LIMITS OF DISTURBANCE — LOD —
- TEMPORARY SILT FENCE — SF —
- TEMPORARY DIVERSION DITCH — >TDD —
- TEMPORARY PERIMETER DIKE
- WATTLE / CHECK DAM
- RIPRAP OUTLET PAD
- DISCHARGE PIPE
- FAIRCLOTH SKIMMER
- EXISTING WETLANDS
- PROJECT BOUNDARY

NOTE:

- SILT FENCE TO BE PLACED AT LIMITS OF DISTURBANCE AND HAS BEEN SHOWN AS AN OFFSET FOR CLARITY.
- WATTLE / CHECK DAMS TO BE PLACED EVERY 200 LF IN PERMANENT DIVERSION DITCH.
- WETLAND INFORMATION BASED ON THE DELINEATION PROGRESS SKETCH – WETLANDS FLAGGED AS OF 11.30.18, PREPARED BY LAND MANAGEMENT GROUP.

TOTAL DISTURBED AREA =84.33 ACRES

N

60' 0 60' 120'
SCALE 1" = 60'

KEY MAP
SCALE: NTS

REV.NO.	DESCRIPTIONS	DATE
	REVISIONS	

SEAL

SEAL
NORTH CAROLINA PROFESSIONAL ENGINEER SEAL 025503 RICHARD A. MOORE
5/27/2020

McKIM&CREED
243 North Front Street
Wilmington, North Carolina 28401
Phone: (910)343-1048, Fax: (910)251-8282
License: F-1222
www.mckimcreed.com

D·R·HORTON® DHI Listed NYSE
America's Builder

SIDBURY FARMS

NEW HANOVER COUNTY, NORTH CAROLINA

ENLARGED EROSION AND SEDIMENT CONTROL PLAN - PHASE 2

DATE:	02/12/2020
MCE PROJ. #	4245-0012
DRAWN	RAS/JEB
DESIGNED	RAS/JEB
CHECKED	RAM
PROJ. MGR.	RAM

SCALE
HORIZONTAL: 1"=60'
VERTICAL: N/A

M&C FILE NUMBER CE-105
DRAWING NUMBER 15

STATUS: TRC SUBMITTAL
REVISION

LEGEND

- TEMPORARY CONSTRUCTION ENTRANCE
- LIMITS OF DISTURBANCE — LOD
- TEMPORARY SILT FENCE — SF
- TEMPORARY DIVERSION DITCH — >TDD
- TEMPORARY PERIMETER DIKE
- WATTLE / CHECK DAM
- RIPRAP OUTLET PAD
- DISCHARGE PIPE
- FAIRCLOTH SKIMMER
- EXISTING WETLANDS
- PROJECT BOUNDARY

NOTE:

- SILT FENCE TO BE PLACED AT LIMITS OF DISTURBANCE AND HAS BEEN SHOWN AS AN OFFSET FOR CLARITY.
- WATTLE / CHECK DAMS TO BE PLACED EVERY 200 LF IN PERMANENT DIVERSION DITCH.
- WETLAND INFORMATION BASED ON THE DELINEATION PROGRESS SKETCH – WETLANDS FLAGGED AS OF 11.30.18, PREPARED BY LAND MANAGEMENT GROUP.

TOTAL DISTURBED AREA =84.33 ACRES

KEY MAP
SCALE: NTS

REV.NO.	DESCRIPTIONS	DATE
	REVISIONS	

SEAL

SEAL
NORTH CAROLINA PROFESSIONAL ENGINEER SEAL 025503 RICHARD A. MOORE 5/27/2020

McKIM&CREED
243 North Front Street
Wilmington, North Carolina 28401
Phone: (910)343-1048, Fax: (910)251-8282
License: F-1222
www.mckimcreed.com

D·R·HORTON® DHI Listed NYSE
America's Builder

SIDBURY FARMS

NEW HANOVER COUNTY, NORTH CAROLINA

ENLARGED EROSION AND SEDIMENT CONTROL PLAN - PHASE 2

DATE:	02/12/2020
MCE PROJ. #	4245-0012
DRAWN	RAS/JEB
DESIGNED	RAS/JEB
CHECKED	RAM
PROJ. MGR.	RAM

SCALE
HORIZONTAL: 1"=60'
VERTICAL: N/A

M&C FILE NUMBER CE-106
DRAWING NUMBER 16

STATUS: TRC SUBMITTAL
REVISION

MATCHLINE
SEE SHEET CS-106

MATCHLINE
SEE SHEET CE-105

404
WETLANDS

MAINTAIN EXISTING
SILT FENCE (SF 5)
(DOUBLE ROW)
SEE DETAIL;
SHEET CE-501

ROAD I
(60' PRIVATE R/W)

N77°35'30"W 1556.20' (RECORD)

TSB-4

LIMITS OF
DISTURBANCE

MAINTAIN EXISTING
TEMPORARY PERIMETER DIKE
(PD-1)

OUTLET PROTECTION

RIPRAP OUTLET PROTECTION
(TYP)

SKIMMER AND OUTLET STRUCTURE
(TYP.)

TEMPORARY
SILT FENCE (SF 4)
(DOUBLE ROW)
SEE DETAIL;
SHEET CE-501

LEGEND

- TEMPORARY CONSTRUCTION ENTRANCE
- LIMITS OF DISTURBANCE — LOD —
- TEMPORARY SILT FENCE — SF —
- TEMPORARY DIVERSION DITCH — >TDD —
- TEMPORARY PERIMETER DIKE
- WATTLE / CHECK DAM
- RIPRAP OUTLET PAD
- DISCHARGE PIPE
- FAIRCLOTH SKIMMER
- EXISTING WETLANDS
- PROJECT BOUNDARY

NOTE:

- SILT FENCE TO BE PLACED AT LIMITS OF DISTURBANCE AND HAS BEEN SHOWN AS AN OFFSET FOR CLARITY.
- WATTLE / CHECK DAMS TO BE PLACED EVERY 200 LF IN PERMANENT DIVERSION DITCH.
- WETLAND INFORMATION BASED ON THE DELINEATION PROGRESS SKETCH – WETLANDS FLAGGED AS OF 11.30.18, PREPARED BY LAND MANAGEMENT GROUP.

TOTAL DISTURBED AREA =84.33 ACRES

N

60' 0 60' 120'

SCALE 1" = 60'

KEY MAP
SCALE: NTS

REV.NO.	DESCRIPTIONS	DATE
	REVISIONS	

SEAL

SEAL
NORTH CAROLINA PROFESSIONAL ENGINEER SEAL 025503 RICHARD A. MOORE
5/27/2020

McKIM&CREED
243 North Front Street
Wilmington, North Carolina 28401
Phone: (910)343-1048, Fax: (910)251-8282
License: F-1222
www.mckimcreed.com

D·R·HORTON® DHI Listed NYSE
America's Builder

SIDBURY FARMS

NEW HANOVER COUNTY, NORTH CAROLINA

ENLARGED EROSION AND SEDIMENT CONTROL PLAN - PHASE 2

DATE:	02/12/2020
MCE PROJ. #	4245-0012
DRAWN	RAS/JEB
DESIGNED	RAS/JEB
CHECKED	RAM
PROJ. MGR.	RAM

SCALE
HORIZONTAL: 1"=60'
VERTICAL: N/A

M&C FILE NUMBER CE-107
DRAWING NUMBER 17

STATUS: TRC SUBMITTAL
REVISION

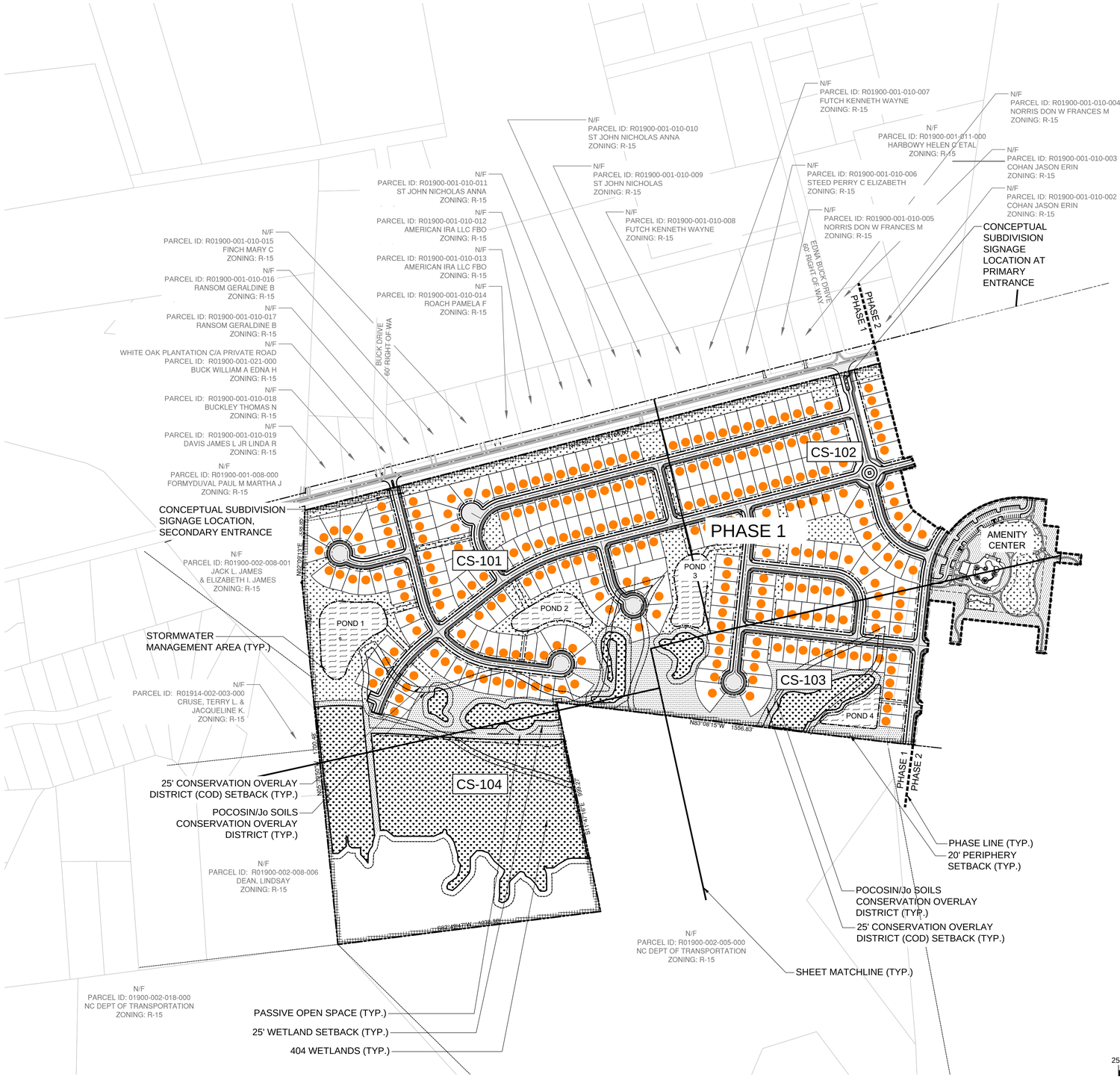

SITE DATA TABLE

GENERAL INFORMATION		
PROPERTY OWNER:	RMP SIDBURY ROAD LLC	
PARCEL ID:	R01900-002-004-000, R01900-002-009-000	
CURRENT ZONING:	R15	
TOTAL ACREAGE:	122.27 AC (5,325,989 SF)	
PROPOSED USE:	PERFORMANCE RESIDENTIAL	
ADDRESS:	6010 SIDBURY RD; 6220 SIDBURY RD	
BUILDING SETBACKS	REQUIRED	PROPOSED
PROPERTY PERIPHERY	20'	20'
DETACHED SINGLE FAMILY DWELLING UNITS	10' SEPARATION	10' SEPARATION

AREA CALCULATIONS	
RESIDENTIAL USE	115.41 ACRES (5,027,257 SF)
AMENITY CENTER	6.86 ACRES (298,732 SF)
TOTAL SITE ACREAGE	122.27 ACRES
PROPOSED UNITS	258 DU
PROPOSED DENSITY	2.11 DU/ACRE

	REQUIRED	PROVIDED
OPEN SPACE REQUIREMENT .03 AC * 258 DU = 7.74 ACRES ACTIVE OPEN SPACE = 50%, 3.87 ACRES PASSIVE OPEN SPACE = 50%, 3.87 ACRES	7.74 ACRES TOTAL 3.87 ACRES (ACTIVE) 3.87 ACRES (PASSIVE)	25.14 ACRES TOTAL ±1,095,269 SF ±12.32 ACRES ±536,623 SF (ACTIVE) ±12.82 ACRES ±558,646 SF (PASSIVE)

PROPOSED UNITS	
PHASE 1	SINGLE FAMILY (60' x 120')
TOTAL UNITS	258
TOTAL BEDROOM COUNT (3 PER UNIT)	774
STRUCTURE AREAS	
RIGHT OF WAY	
PROPOSED WIDTH	50'
PROPOSED AREA	14.87 ACRES (647,908 SF)

NOTES:

WETLAND INFORMATION BASED ON THE DELINEATION PROGRESS SKETCH - WETLANDS FLAGGED AS OF 11.30.18, PREPARED BY LAND MANAGEMENT GROUP.

SOILS INFORMATION BASED ON INFORMATION OBTAINED ONLINE ON 03.06.19 VIA NEW HANOVER COUNTY GIS SERVICES.

TYPICAL SINGLE FAMILY LOT IS 60' x 120', 70' x120' AT STREET CORNERS.

DUKE ENERGY TO DESIGN, OWN, AND MAINTAIN STREET LIGHTING IN ACCORDANCE WITH THE NEW HANOVER COUNTY SUBDIVISION ORDINANCE, SECTION 52-9.

ALL COMMUNITY OWNED OPEN SPACE AVAILABLE FOR USE AS DRAINAGE AND/OR UTILITY EASEMENT.

OPEN SPACE LEGEND:

ACTIVE RECREATION SPACE

PASSIVE RECREATION SPACE

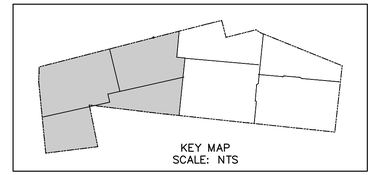

REV.NO.	DESCRIPTIONS	DATE
	REVISIONS	

SEAL

SEAL
NORTH CAROLINA PROFESSIONAL SEAL 025503 ENGINEER RICHARD A. MOORE
5/27/2020

McKIM&CREED
243 North Front Street
Wilmington, North Carolina 28401
Phone: (910)343-1048, Fax: (910)251-8282
License: F-1222
www.mckimcreed.com

D·R·HORTON® DHI Listed NYSE
America's Builder

SIDBURY FARMS

NEW HANOVER COUNTY, NORTH CAROLINA

OVERALL SITE PLAN

DATE:	02/12/2020
MCE PROJ. #	4245-0012
DRAWN	RAS/JEB
DESIGNED	RAS/JEB
CHECKED	RAM
PROJ. MGR.	RAM

SCALE
HORIZONTAL: 1"=250'
VERTICAL: N/A

M&C FILE NUMBER CS-100
DRAWING NUMBER 18

STATUS: TRC SUBMITTAL
REVISION

PROJECT BOUNDARY

CONCEPTUAL SUBDIVISION SIGNAGE LOCATION, SECONDARY ENTRANCE

20' PERIPHERY SETBACK (TYP)

50' GAS LINE EASEMENT (TYP)

ACTIVE OPEN SPACE (TYP)

50.00' GAS LINE EASEMENT

50' PRIVATE R/W (TYP)

20.0' DRAINAGE EASEMENT

5.0' PLANTING STRIP (TYP)

NONMUNICPAL EASEMENT (TYP)

PEDESTRIAN CROSSING SIGN (TYP)

10 x 70 NCDOT SIGHT DISTANCE TRIANGLE (TYP)

EDGE OF PAVEMENT (TYP)
FACE OF CURB (TYP)
BACK OF CURB (TYP)
2' VALLEY CURB (TYP)

PUMP STATION

5' SIDEWALK (TYP)

PASSIVE OPEN SPACE (TYP)

404 WETLANDS

POND 1

POND 2

POND 3

ROAD A (60' PRIVATE R/W)

ROAD B (60' PRIVATE R/W)

ROAD C (60' PRIVATE R/W)

ROAD D (60' PRIVATE R/W)

MATCHLINE
SEE SHEET CS-102

N

SCALE 1" = 60'

KEY MAP
SCALE: NTS

REVISIONS

REV.NO.	DESCRIPTIONS	DATE

SEAL

SEAL
025503
ENGINEER
RICHARD A. MOORE
5/27/2020

McKIM&CREED
243 North Front Street
Wilmington, North Carolina 28401
Phone: (910)343-1048, Fax: (910)251-8282
License: F-1222
www.mckimcreed.com

D·R·HORTON® DHI Listed NYSE
America's Builder

SIDBURY FARMS

NEW HANOVER COUNTY, NORTH CAROLINA

ENLARGED SITE PLAN

DATE:	02/12/2020
MCE PROJ. #	4245-0012
DRAWN	RAS/JEB
DESIGNED	RAS/JEB
CHECKED	RAM
PROJ. MGR.	RAM

SCALE
HORIZONTAL: 1"=60'
VERTICAL: N/A

M&C FILE NUMBER: CS-101
DRAWING NUMBER: 19

STATUS: TRC SUBMITTAL
REVISION

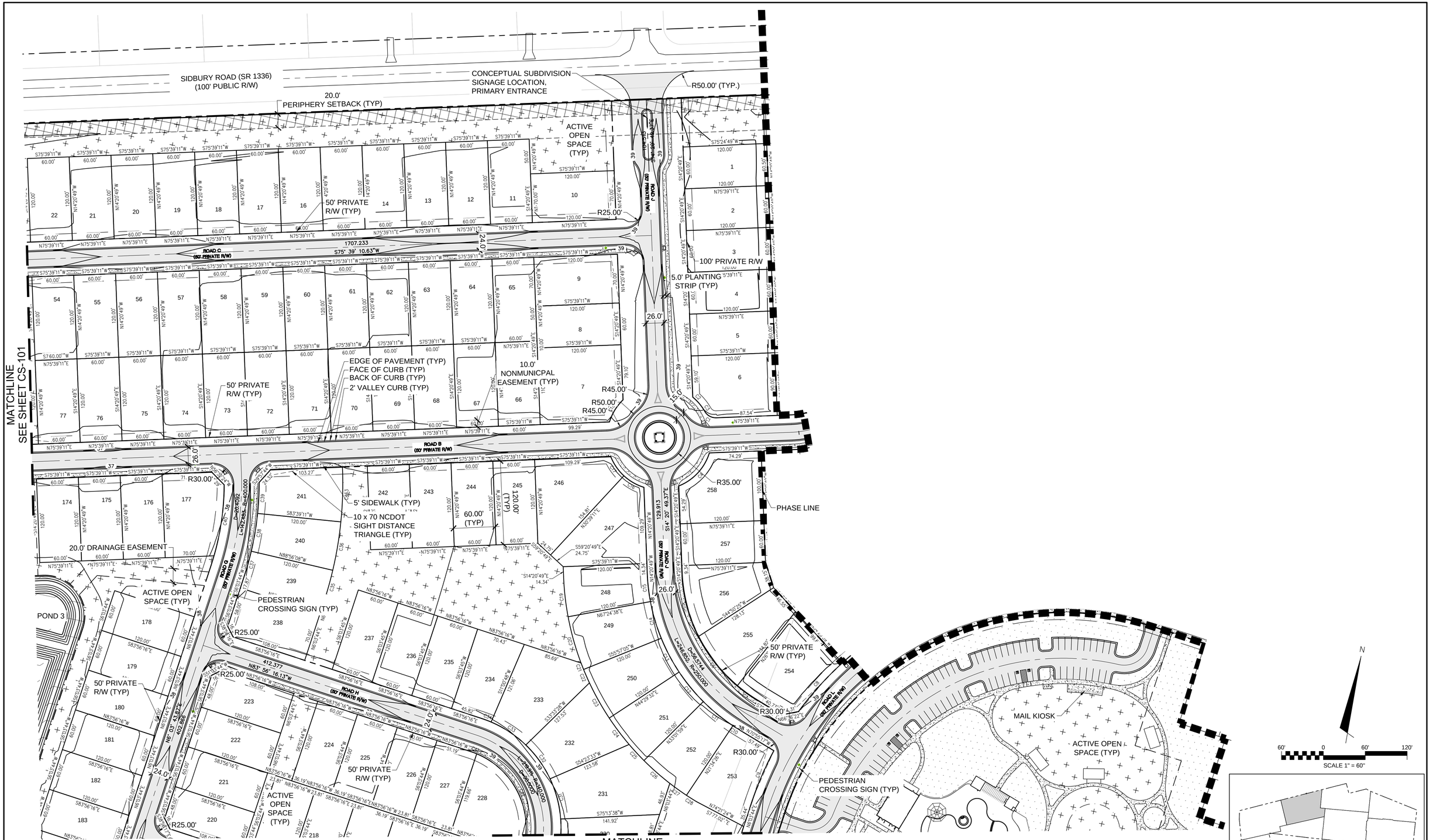

REV.NO.	DESCRIPTIONS	DATE
	REVISIONS	

SEAL

SEAL
NORTH CAROLINA PROFESSIONAL ENGINEER SEAL 025503 RICHARD A. MOORE
5/27/2020

McKIM&CREED
243 North Front Street
Wilmington, North Carolina 28401
Phone: (910)343-1048, Fax: (910)251-8282
License: F-1222
www.mckimcreed.com

D·R·HORTON® DHI Listed NYSE
America's Builder

SIDBURY FARMS

NEW HANOVER COUNTY, NORTH CAROLINA

ENLARGED SITE PLAN

DATE:	02/12/2020
MCE PROJ. #	4245-0012
DRAWN	RAS/JEB
DESIGNED	RAS/JEB
CHECKED	RAM
PROJ. MGR.	RAM

SCALE
HORIZONTAL: 1"=60'
VERTICAL: N/A

M&C FILE NUMBER: CS-102
DRAWING NUMBER: 20

STATUS: TRC SUBMITTAL
REVISION

MATCHLINE
SEE SHEET CS-102

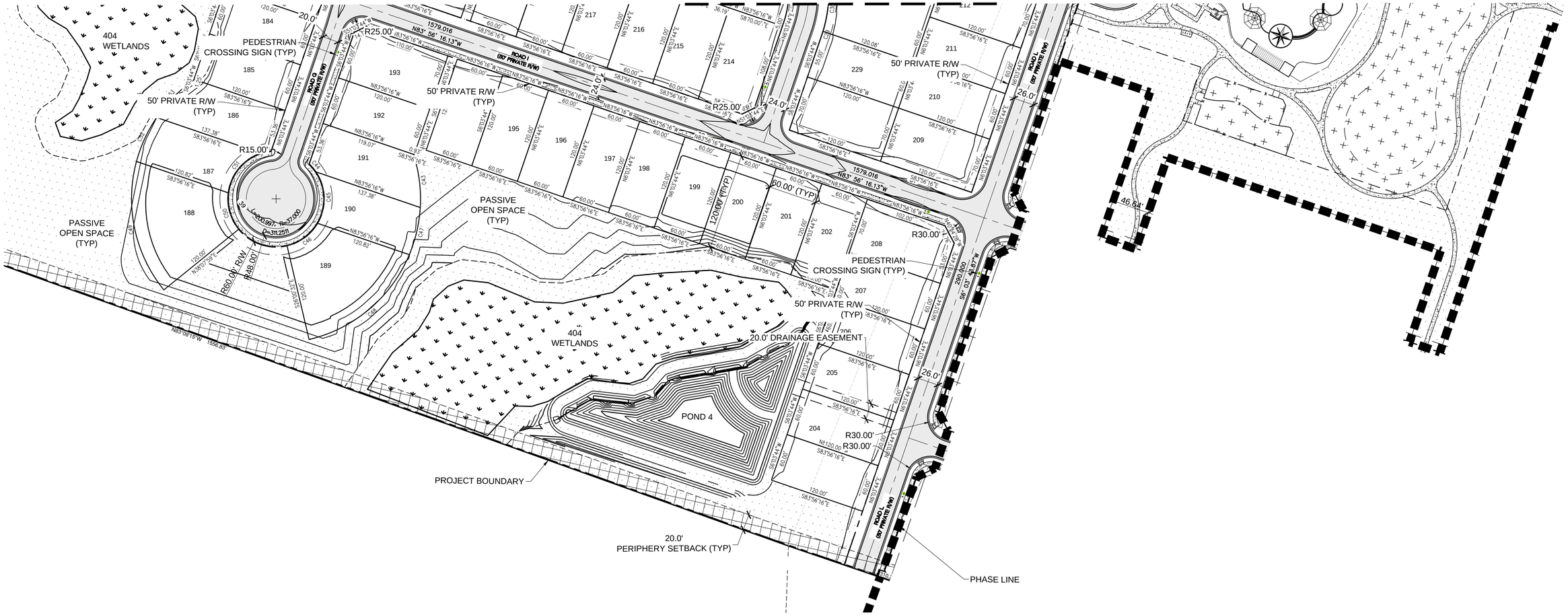

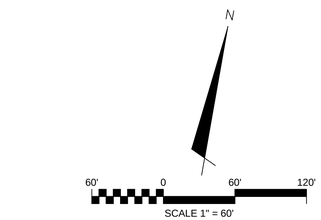

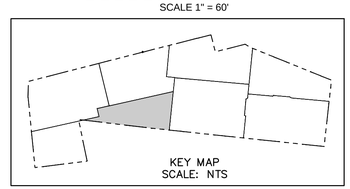

REV.NO.	DESCRIPTIONS	DATE
	REVISIONS	

SEAL

SEAL

NORTH CAROLINA PROFESSIONAL SEAL 025503 ENGINEER RICHARD A. MOORE
5/27/2020

McKIM&CREED
243 North Front Street
Wilmington, North Carolina 28401
Phone: (910)343-1048, Fax: (910)251-8282
License: F-1222
www.mckimcreed.com

D·R·HORTON® DHI Listed NYSE
America's Builder

SIDBURY FARMS

NEW HANOVER COUNTY, NORTH CAROLINA

ENLARGED SITE PLAN

DATE:	02/12/2020
MCE PROJ. #	4245-0012
DRAWN	RAS/JEB
DESIGNED	RAS/JEB
CHECKED	RAM
PROJ. MGR.	RAM

SCALE
HORIZONTAL: 1"=60'
VERTICAL: N/A

M&C FILE NUMBER
CS-103
DRAWING NUMBER
21

STATUS: TRC SUBMITTAL
REVISION

CURVE TABLE						
CURVE	RADIUS	LENGTH	TANGENT	BEARING	CHORD	DELTA
C1	18.00	19.62	10.91	S73°07'01.12"E	18.67	62°27'37"
C2	75.00	21.41	10.78	S54°21'28.21"E	21.34	16°21'28"
C3	75.00	5.62	2.81	S44°01'58.52"E	5.62	4°17'31"
C4	75.00	66.83	35.82	S30°39'10.63"W	64.64	51°03'27"
C5	225.00	95.94	48.71	S26°33'46.92"E	95.22	24°25'55"
C6	225.00	90.44	45.84	S50°17'40.88"E	89.84	23°01'53"
C7	225.00	35.78	17.93	S66°21'57.25"E	35.74	9°06'40"
C8	470.00	93.79	47.05	N29°51'01.10"E	93.63	11°25'59"
C9	470.00	81.76	40.98	N11°02'44.97"E	81.66	9°58'02"
C10	275.00	11.33	5.66	N69°44'28.90"W	11.33	2°21'37"
C11	275.00	54.84	27.51	N62°50'55.69"W	54.74	11°25'30"
C12	275.00	54.87	27.53	N51°25'13.77"W	54.78	11°25'54"
C13	275.00	54.91	27.54	N39°59'05.57"W	54.81	11°26'22"
C14	275.00	54.95	27.57	N28°32'27.70"W	54.86	11°26'53"
C15	275.00	40.65	20.36	N18°34'55.18"W	40.62	8°28'12"
C16	75.00	33.42	16.99	N72°06'41.17"W	33.14	25°31'44"
C17	75.00	33.42	16.99	N46°34'57.57"W	33.14	25°31'44"
C18	75.00	37.59	19.20	N19°29'00.26"E	37.20	28°43'06"
C19	395.00	57.92	29.01	S18°32'50.79"E	57.86	8°24'03"
C20	395.00	69.08	34.63	S27°45'28.62"E	68.99	10°01'13"
C21	395.00	9.87	4.93	S33°29'01.33"E	9.87	1°25'53"
C22	395.00	21.01	10.51	N35°43'22.19"W	21.00	3°02'49"
C23	395.00	57.90	29.00	S41°26'44.09"E	57.85	8°23'55"
C24	395.00	47.48	23.77	S49°05'18.25"E	47.45	6°53'14"
C25	395.00	31.39	15.70	S54°48'30.31"E	31.38	4°33'10"
C26	395.00	49.46	24.76	S60°40'18.91"E	49.43	7°10'27"
C27	395.00	29.38	14.70	N66°23'22.50"W	29.37	4°15'40"
C28	395.00	16.55	8.28	S69°43'14.98"E	16.55	2°24'04"
C29	165.00	5.00	2.50	S5°11'38.17"W	5.00	1°44'11"
C30	165.00	60.00	30.34	S6°05'30.23"E	59.67	20°50'05"
C31	165.00	60.00	30.34	S26°55'35.61"E	59.67	20°50'05"
C32	165.00	60.00	30.34	S47°45'41.00"E	59.67	20°50'05"
C33	165.00	60.00	30.33	S68°35'44.97"E	59.67	20°50'03"
C34	165.00	14.18	7.10	S81°28'31.19"E	14.18	4°55'30"
C35	545.00	47.54	23.78	N3°33'47.98"E	47.52	4°59'52"
C36	545.00	70.50	35.30	N2°38'28.49"W	70.45	7°24'41"
C37	425.00	37.07	18.55	S3°33'47.98"W	37.06	4°59'52"
C38	425.00	54.98	27.53	S2°38'28.49"E	54.94	7°24'41"
C39	425.00	44.45	22.24	S9°20'34.34"E	44.42	5°59'31"
C40	375.00	103.27	51.96	N3°58'40.51"W	102.95	15°46'44"
C41	115.00	8.82	4.41	N81°44'26.32"W	8.82	4°23'40"
C42	115.00	171.82	106.50	N36°44'26.32"W	156.28	85°36'20"
C43	180.00	67.22	34.01	N20°04'16.54"W	66.83	21°23'51"
C44	60.00	12.98	6.52	S53°06'55.44"E	12.96	12°23'46"
C45	60.00	67.66	37.94	S14°36'46.36"E	64.13	64°36'32"
C46	60.00	48.48	25.65	S40°50'28.94"W	47.18	46°17'59"
C47	180.00	60.59	30.59	N0°16'16.44"E	60.31	19°17'15"
C48	180.00	169.89	91.87	N36°57'11.12"E	163.65	54°04'34"
C49	180.00	169.89	91.87	S24°49'43.38"E	163.65	54°04'34"
C50	60.00	48.48	25.65	N28°43'01.20"W	47.18	46°17'59"
C51	60.00	67.66	37.94	N26°44'14.10"E	64.13	64°36'32"
C52	180.00	60.59	30.59	S11°51'11.30"W	60.31	19°17'15"
C53	180.00	65.66	33.20	S31°56'51.24"W	65.30	20°54'05"
C54	60.00	12.98	6.52	N65°14'23.18"E	12.96	12°23'46"
C55	125.00	86.61	45.12	S34°11'47.64"E	84.89	39°41'57"
C56	60.00	40.53	21.07	N74°43'32.68"E	39.77	38°42'18"
C57	60.00	46.13	24.27	S63°53'54.91"E	45.00	44°02'46"
C58	60.00	41.97	21.89	S21°50'09.04"E	41.12	40°04'45"
C59	60.00	52.27	27.92	S23°09'31.95"W	50.63	49°54'37"
C60	60.00	50.76	27.01	S72°21'08.19"W	49.26	48°28'36"
C61	295.00	100.72	50.86	S48°39'07.39"E	100.23	19°33'45"
C62	60.00	16.05	8.07	N1°41'51.70"W	16.00	15°19'28"

CURVE TABLE						
CURVE	RADIUS	LENGTH	TANGENT	BEARING	CHORD	DELTA
C63	175.00	50.97	25.67	N47°12'53.21"W	50.79	16°41'16"
C64	295.00	101.05	51.03	S29°03'27.38"E	100.56	19°37'35"
C65	175.00	59.95	30.27	N29°03'27.38"W	59.65	19°37'35"
C66	175.00	14.96	7.48	N16°47'44.55"W	14.95	4°53'50"
C67	295.00	25.21	12.62	S16°47'44.55"E	25.21	4°53'50"
C68	855.00	11.48	5.74	N75°16'05.99"E	11.48	0°46'09"
C69	855.00	9.51	4.75	N74°33'54.38"E	9.51	0°38'14"
C70	855.00	58.63	29.33	N72°16'55.47"E	58.62	3°55'44"
C71	1025.00	58.42	29.22	N74°01'12.33"E	58.41	3°15'57"
C72	1025.00	57.73	28.87	N70°46'25.17"E	57.72	3°13'38"
C73	1025.00	58.85	29.43	N67°30'54.83"E	58.84	3°17'23"
C74	1025.00	58.85	29.43	N64°13'31.88"E	58.84	3°17'23"
C75	1025.00	58.85	29.43	N60°56'08.92"E	58.84	3°17'23"
C76	1025.00	40.61	20.31	N58°09'21.56"E	40.61	2°16'12"
C77	1145.00	66.48	33.25	S57°37'39.43"W	66.47	3°19'36"
C78	1145.00	25.10	12.55	S59°55'08.47"W	25.10	1°15'22"
C79	1145.00	40.64	20.32	N61°33'49.95"E	40.64	2°02'01"
C80	1145.00	21.09	10.54	N63°06'29.94"E	21.09	1°03'19"
C81	1145.00	44.65	22.33	N64°45'11.41"E	44.65	2°14'04"
C82	1145.00	16.37	8.19	N66°16'48.24"E	16.37	0°49'10"
C83	1145.00	49.37	24.69	N67°55'29.72"E	49.36	2°28'13"
C84	1145.00	11.15	5.58	N69°26'20.67"E	11.15	0°33'29"
C85	1145.00	60.19	30.10	N71°13'26.16"E	60.18	3°00'42"
C86	1145.00	58.42	29.21	N74°11'28.96"E	58.41	2°55'23"
C87	175.00	22.83	11.43	N71°54'55.04"E	22.82	7°28'31"
C88	175.00	67.99	34.43	N57°02'50.47"E	67.56	22°15'38"
C89	58.00	51.05	27.31	S52°04'26.47"E	49.42	50°25'49"
C90	58.00	51.84	27.80	N77°06'18.36"E	50.13	51°12'42"
C91	58.00	35.14	18.13	N34°08'39.59"E	34.60	34°42'36"
C92	58.00	40.27	20.98	N3°05'56.35"W	39.46	39°46'36"
C93	58.00	71.35	40.98	N58°13'40.96"W	66.93	70°28'53"
C94	175.00	29.89	14.98	N8°51'46.58"E	29.85	9°47'04"
C95	175.00	55.50	27.98	N14°07'39.58"W	55.27	18°10'14"
C96	175.00	36.88	18.51	N29°14'59.54"W	36.81	12°04'26"
C97	1025.00	26.27	13.14	N52°34'52.73"E	26.27	1°28'07"
C98	855.00	58.63	29.33	N68°21'11.60"E	58.62	3°55'44"
C99	855.00	58.63	29.33	N64°25'27.73"E	58.62	3°55'44"
C100	855.00	58.63	29.33	N60°29'43.86"E	58.62	3°55'44"
C101	975.00	66.86	33.44	S72°16'55.47"W	66.84	3°55'44"
C102	975.00	23.93	11.97	S74°56'59.02"W	23.93	1°24'23"
C103	975.00	66.86	33.44	S68°21'11.60"W	66.84	3°55'44"
C104	975.00	66.86	33.44	S64°25'27.73"W	66.84	3°55'44"
C105	975.00	66.86	33.44	S60°29'43.86"W	66.84	3°55'44"
C106	975.00	31.64	15.82	S52°46'35.85"W	31.64	1°51'33"
C107	18.00	1.94	0.97	N54°56'02.38"E	1.94	6°10'26"
C108	18.00	1.94	0.97	S34°19'18.97"E	1.94	6°10'26"
C109	375.00	87.97	44.19	S24°30'51.18"E	87.77	13°26'30"
C110	375.00	22.56	11.28	S16°04'12.89"E	22.55	3°26'47"
C111	125.00	85.96	44.76	S84°38'43.64"E	84.28	39°24'11"
C112	60.00	47.96	25.35	S10°27'18.27"E	46.69	45°48'00"
C113	60.00	27.20	13.84	S46°20'29.00"E	26.97	25°58'21"
C114	60.00	31.28	16.00	S74°15'41.66"E	30.92	29°52'04"
C115	60.00	47.92	25.32	N6°46'40.22"E	46.65	45°45'27"
C116	60.00	32.92	16.88	N45°22'25.13"E	32.51	31°26'03"
C117	60.00	31.12	15.92	N75°56'51.37"E	30.77	29°42'50"
C118	170.00	105.60	54.57	S56°04'19.21"E	103.91	35°35'28"
C119	60.00	37.27	19.26	N56°04'19.21"W	36.67	35°35'28"
C120	60.00	45.60	23.96	S84°21'44.08"W	44.51	43°32'25"
C121	175.00	24.44	12.24	N65°20'58.35"W	24.42	8°00'07"
C122	295.00	79.59	40.04	S77°04'46.34"E	79.35	15°27'28"
C123	175.00	47.21	23.75	N77°04'46.34"W	47.07	15°27'28"
C124	175.00	43.36	21.79	S88°05'35.00"W	43.25	14°11'49"

CURVE TABLE						
CURVE	RADIUS	LENGTH	TANGENT	BEARING	CHORD	DELTA
C125	175.00	16.32	8.16	S78°19'25.61"W	16.31	5°20'30"
C126	295.00	84.30	42.44	N87°00'18.46"E	84.01	16°22'22"
C127	295.00	16.30	8.15	N77°14'09.07"E	16.30	3°09'57"
C128	425.00	57.67	28.88	N21°20'57.07"W	57.63	7°46'29"
C129	545.00	73.95	37.03	S21°20'57.07"E	73.90	7°46'29"
C130	425.00	70.80	35.48	N30°00'30.97"W	70.71	9°32'39"
C131	545.00	101.77	51.03	S30°35'09.02"E	101.62	10°41'55"
C132	845.00	68.05	34.05	S40°51'56.96"W	68.04	4°36'52"
C133	845.00	68.05	34.05	S36°15'05.03"W	68.04	4°36'52"
C134	845.00	68.05	34.05	S31°38'13.09"W	68.04	4°36'52"
C135	845.00	68.05	34.05	S27°01'21.16"W	68.04	4°36'52"
C136	725.00	58.39	29.21	N27°01'21.95"E	58.37	4°36'52"
C137	725.00	58.39	29.21	N31°38'13.57"E	58.37	4°36'52"
C138	725.00	58.39	29.21	N36°15'05.19"E	58.37	4°36'52"
C139	725.00	58.39	29.21	N40°51'56.80"E	58.37	4°36'52"
C140	725.00	75.32	37.70	N48°52'14.48"E	75.29	5°57'10"
C141	675.00	70.43	35.25	S20°33'56.61"W	70.40	5°58'43"
C142	675.00	70.43	35.25	S26°32'39.48"W	70.40	5°58'43"
C143	675.00	70.43	35.25	S32°31'22.33"W	70.40	5°58'43"
C144	675.00	70.43	35.25	S38°30'05.18"W	70.40	5°58'43"
C145	555.00	57.91	28.98	N20°33'55.32"E	57.89	5°58'43"
C146	555.00	57.91	28.98	N26°32'38.60"E	57.89	5°58'43"
C147	555.00	57.91	28.98	N32°31'21.89"E	57.89	5°58'43"
C148	555.00	57.91	28.98	N38°30'05.17"E	57.89	5°58'43"
C149	545.00	88.08	44.13	S45°50'58.94"E	87.98	9°15'35"
C150	545.00	73.48	36.80	S54°20'31.72"E	73.43	7°43'31"
C151	545.00	73.48	36.80	S62°04'02.70"E	73.43	7°43'31"
C152	545.00	73.48	36.80	S69°47'33.69"E	73.43	7°43'31"
C153	545.00	73.48	36.80	S77°31'04.67"E	73.43	7°43'31"
C154	545.00	16.71	8.36	S82°15'32.59"E	16.71	1°45'25"
C155	182.01	79.12	40.19	N83°43'18.11"E	78.50	24°54'22"
C156	182.01	124.30	64.68	N51°42'18.35"E	121.90	39°07'38"
C157	182.01	143.22	75.55	N13°04'34.61"W	139.56	45°05'07"
C158	182.01	148.40	78.60	N58°58'32.61"W	144.32	46°42'49"
C159	182.01	128.16	66.87	S77°29'43.75"W	125.53	40°20'39"
C160	182.01	11.40	5.70	S55°31'46.34"W	11.40	3°35'16"
C161	255.00	45.97	23.05	N77°58'21.05"W	45.91	10°19'48"
C162	255.00	8.20	4.10	N71°53'10.12"W	8.20	1°50'34"
C163	255.00	56.09	28.16	S64°39'49.08"E	55.97	12°36'08"
C164	255.00	64.90	32.63	S51°04'15.11"E	64.73	14°35'00"
C165	389.68	87.45	43.91	S52°29'52.21"E	87.26	12°51'27"
C166	389.68	82.48	41.39	S64°59'24.37"E	82.32	12°07'37"
C167	389.68	79.64	39.96	S76°54'29.73"E	79.50	11°42'34"
C168	3.00	5.13	3.45	N47°52'59.09"E	4.53	97°57'32"
C169	62.00	58.42	31.58	N25°53'44.16"E	56.28	53°59'02"
C170	62.00	48.57	25.61	N75°19'43.76"E	47.34	44°52'57"
C171	62.00	56.05	30.10	S56°19'54.57"E	54.16	51°47'46"
C172	62.00	51.16	27.14	S6°47'40.32"E	49.72	47°16'42"
C173	62.00	38.57	19.93	S56°48'16.83"W	37.95	35°38'31"
C174	62.00	24.05	12.18	S85°44'15.44"W	23.90	22°13'26"
C175	425.00	13.03	6.52	N82°15'32.59"W	13.03	1°45'25"
C176	425.00	57.30	28.70	N77°31'04.67"W	57.26	7°43'31"
C177	425.00	57.30	28.70	N69°47'33.69"W	57.26	7°43'31"
C178	425.00	57.30	28.70	N62°04'02.70"W	57.26	7°43'31"
C179	425.00	57.30	28.70	N54°20'31.72"W	57.26	7°43'31"
C180	425.00	50.21	25.14	N47°05'41.38"W	50.18	6°46'10"
C181	675.00	74.97	37.52	S48°39'54.84"W	74.93	6°21'49"
C182	1145.00	32.27	16.14	N52°39'16.43"E	32.27	1°36'54"
C183	125.00	22.90	11.48	S70°24'20.77"W	22.86	10°29'40"
C184	255.00	15.34	7.67	S16°04'12.89"E	15.34	3°26'47"
C185	255.00	65.57	32.97	S25°09'36.23"E	65.39	14°44'00"
C463	545.00	78.61	39.37	N10°28'44.33"W	78.54	8°15'51"

REV.NO.	DESCRIPTIONS	DATE
	REVISIONS	

SEAL

SEAL

NORTH CAROLINA PROFESSIONAL SEAL 025503 ENGINEER RICHARD A. MOORE

5/27/2020

McKIM&CREED
243 North Front Street
Wilmington, North Carolina 28401
Phone: (910)343-1048, Fax: (910)251-8282
License: F-1222
www.mckimcreed.com

D·R·HORTON® DHI Listed NYSE
America's Builder

SIDBURY FARMS

NEW HANOVER COUNTY, NORTH CAROLINA

CURVE TABLE DATA

DATE:	02/12/2020
MCE PROJ. #	4245-0012
DRAWN	RAS/JEB
DESIGNED	RAS/JEB
CHECKED	RAM
PROJ. MGR.	RAM

SCALE
HORIZONTAL: 1"=60'
VERTICAL: N/A

M&C FILE NUMBER CS-104
DRAWING NUMBER 22

STATUS: TRC SUBMITTAL
REVISION

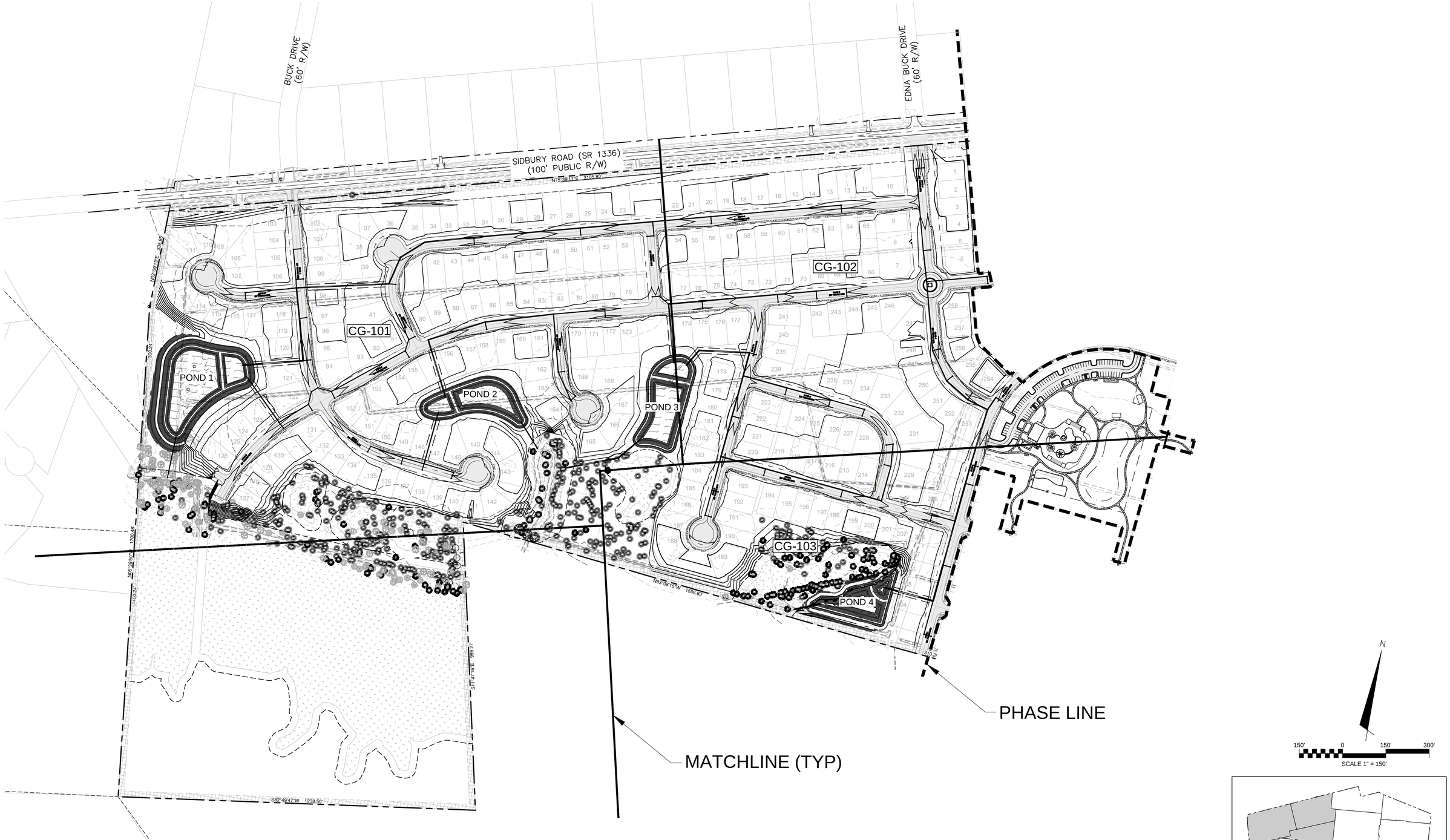

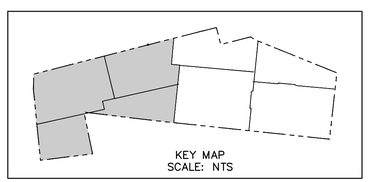

REV.NO.	DESCRIPTIONS	DATE
	REVISIONS	

SEAL

SEAL

NORTH CAROLINA PROFESSIONAL ENGINEER SEAL 025503 RICHARD A. MOORE
5/27/2020

McKIM&CREED
243 North Front Street
Wilmington, North Carolina 28401
Phone: (910)343-1048, Fax: (910)251-8282
License: F-1222
www.mckimcreed.com

D·R·HORTON® DHI Listed NYSE
America's Builder

SIDBURY FARMS

NEW HANOVER COUNTY, NORTH CAROLINA

OVERALL GRADING AND STORMWATER PLAN

DATE:	02/12/2020
MCE PROJ. #	4245-0012
DRAWN	RAS/JEB
DESIGNED	RAS/JEB
CHECKED	RAM
PROJ. MGR.	RAM

SCALE
HORIZONTAL: 1"=150'
VERTICAL: N/A

M&C FILE NUMBER CG-100
DRAWING NUMBER 23

STATUS: TRC SUBMITTAL
REVISION

PROPERTY BOUNDARY

50' PRIVATE R/W (TYP)

ROAD D (50' PRIVATE R/W)

ROAD E (50' PRIVATE R/W)

ROAD A (50' PRIVATE R/W)

ROAD B (50' PRIVATE R/W)

POND 1

POND 2

POND 3

404 WETLANDS

MATCHLINE SEE SHEET CG-102

KEY MAP
SCALE: NTS

60' 0 60' 120'
SCALE 1" = 60'

REVISIONS

REV.NO.	DESCRIPTIONS	DATE

SEAL

SEAL
NORTH CAROLINA PROFESSIONAL ENGINEER SEAL 025503 RICHARD A. MOORE
5/27/2020

McKIM & CREED
243 North Front Street
Wilmington, North Carolina 28401
Phone: (910)343-1048, Fax: (910)251-8282
License: F-1222
www.mckimcreed.com

D·R·HORTON® DHI Listed NYSE
America's Builder

SIDBURY FARMS

NEW HANOVER COUNTY, NORTH CAROLINA

ENLARGED GRADING AND STORMWATER PLAN

DATE:	02/12/2020
MCE PROJ. #	4245-0012
DRAWN	RAS/JEB
DESIGNED	RAS/JEB
CHECKED	RAM
PROJ. MGR.	RAM

SCALE
HORIZONTAL: 1"=60'
VERTICAL: N/A

M&C FILE NUMBER: CG-101
DRAWING NUMBER: 24

STATUS: TRC SUBMITTAL
REVISION

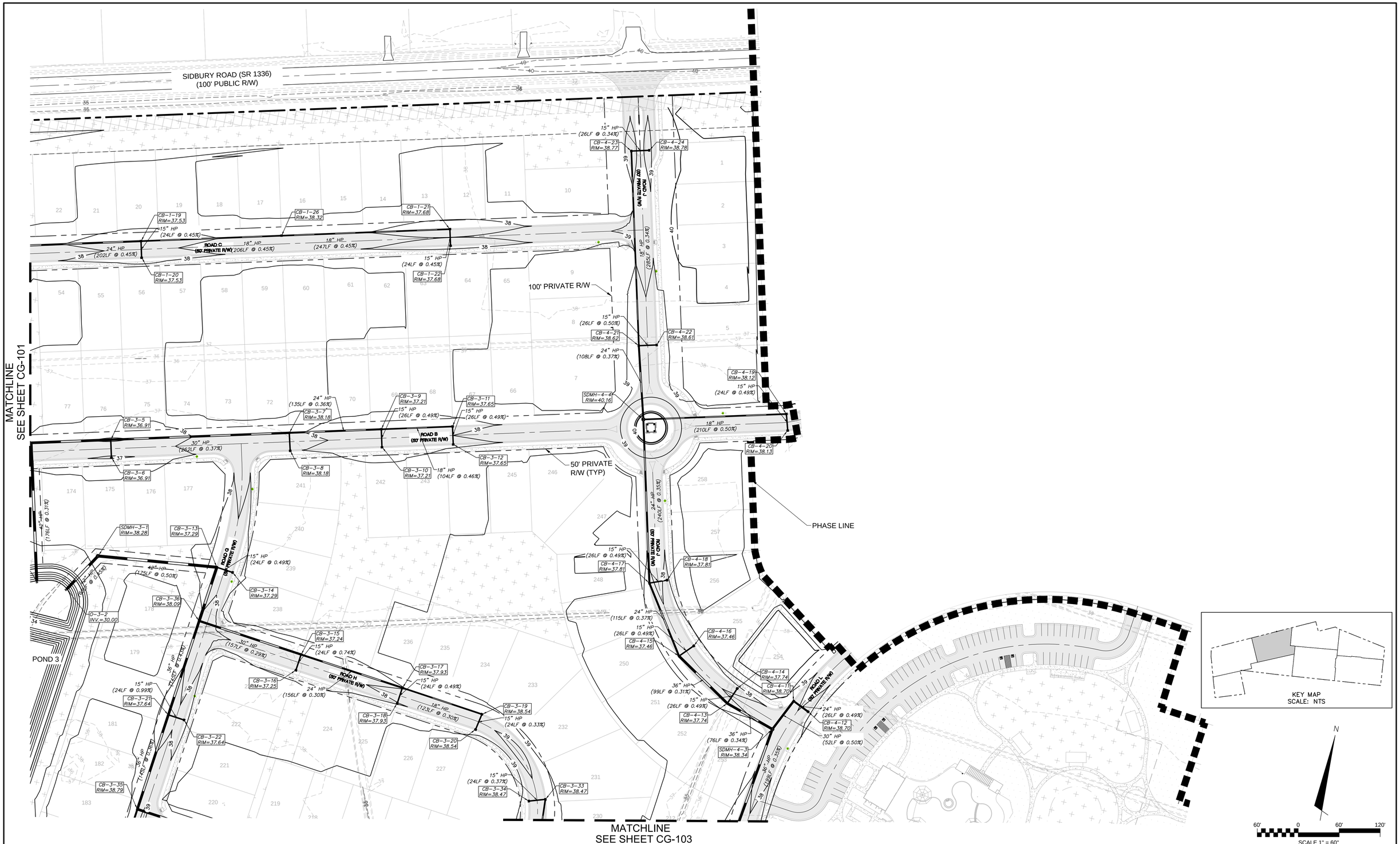

REV.NO.	DESCRIPTIONS	DATE
	REVISIONS	

SEAL

SEAL

NORTH CAROLINA PROFESSIONAL SEAL 025503 ENGINEER RICHARD A. MOORE

5/27/2020

McKIM&CREED
243 North Front Street
Wilmington, North Carolina 28401
Phone: (910)343-1048, Fax: (910)251-8282
License: F-1222
www.mckimcreed.com

D·R·HORTON® DHI Listed NYSE
America's Builder

SIDBURY FARMS

NEW HANOVER COUNTY, NORTH CAROLINA

ENLARGED GRADING AND STORMWATER PLAN

DATE:	02/12/2020
MCE PROJ. #	4245-0012
DRAWN	RAS/JEB
DESIGNED	RAS/JEB
CHECKED	RAM
PROJ. MGR.	RAM

SCALE
HORIZONTAL: 1"=60'
VERTICAL: N/A

M&C FILE NUMBER CG-102
DRAWING NUMBER 25

STATUS: TRC SUBMITTAL
REVISION

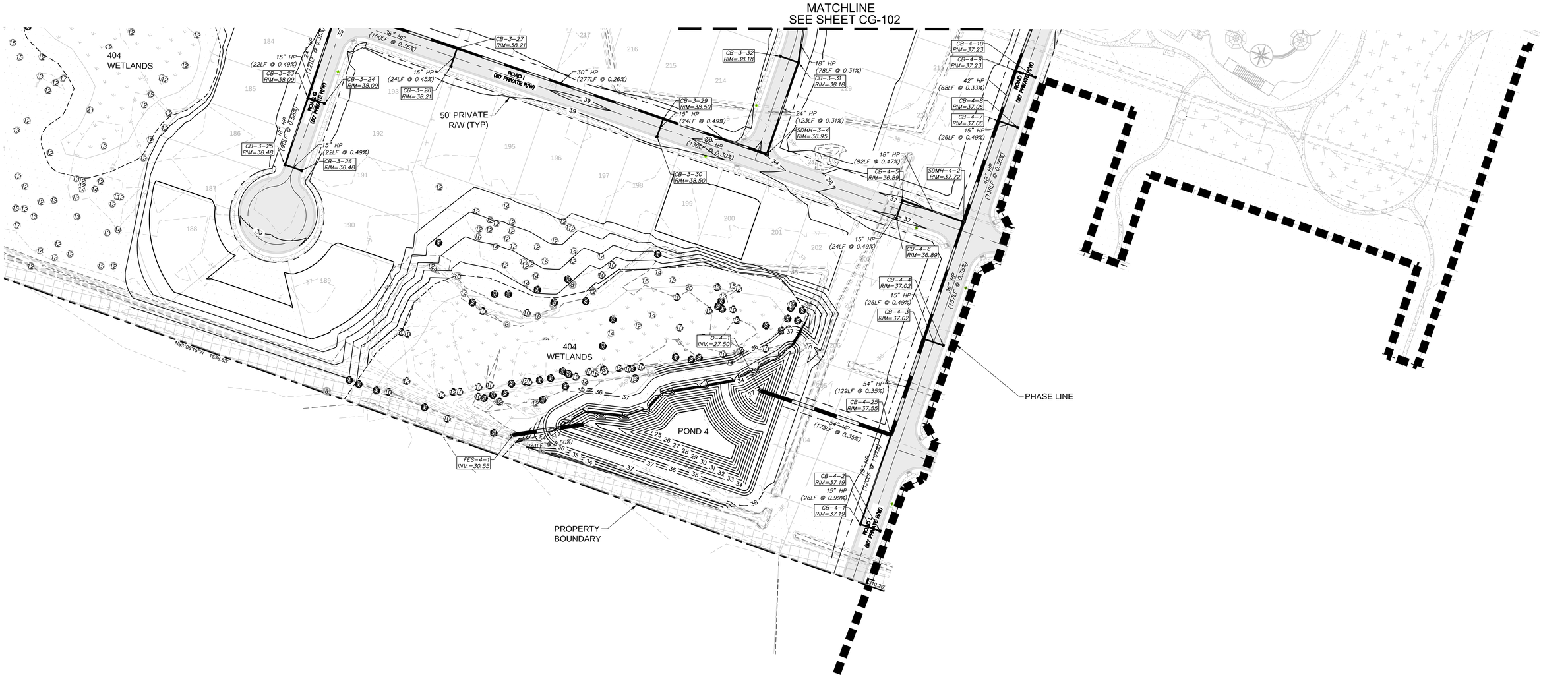

REV.NO.	DESCRIPTIONS	DATE
	REVISIONS	

SEAL

SEAL
NORTH CAROLINA PROFESSIONAL SEAL 025503 ENGINEER RICHARD A. MOORE
5/27/2020

McKIM&CREED
243 North Front Street
Wilmington, North Carolina 28401
Phone: (910)343-1048, Fax: (910)251-8282
License: F-1222
www.mckimcreed.com

D·R·HORTON® DHI Listed NYSE
America's Builder

SIDBURY FARMS

NEW HANOVER COUNTY, NORTH CAROLINA

ENLARGED GRADING
AND STORMWATER PLAN

DATE:	02/12/2020
MCE PROJ. #	4245-0012
DRAWN	RAS/JEB
DESIGNED	RAS/JEB
CHECKED	RAM
PROJ. MGR.	RAM

SCALE
HORIZONTAL: 1"=60'
VERTICAL: N/A

M&C FILE NUMBER CG-103
DRAWING NUMBER 26

STATUS: TRC SUBMITTAL
REVISION

BUCK DRIVE (60' R/W)

EDNA BUCK DRIVE (60' R/W)

SIDBURY ROAD (SR 1336) (100' PUBLIC R/W)

PUMP STATION SITE 1

PUMP STATION

CU-101

CU-102

CU-103

PHASE LINE

MATCHLINE (TYP)

N

150' 0 150' 300'

SCALE 1" = 150'

NOTE: COORDINATION WITH CFPUA IS ONGOING TO DETERMINE THE BEST WAY TO SERVICE THE SITE WITH PUBLIC WATER AND SEWER.

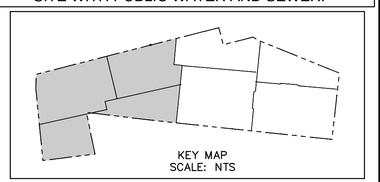

KEY MAP
SCALE: NTS

REV.NO.	DESCRIPTIONS	DATE
	REVISIONS	

SEAL

SEAL

NORTH CAROLINA PROFESSIONAL ENGINEER SEAL 025503 RICHARD A. MOORE

5/27/2020

McKIM & CREED
243 North Front Street
Wilmington, North Carolina 28401
Phone: (910)343-1048, Fax: (910)251-8282
License: F-1222
www.mckimcreed.com

D·R·HORTON® DHI Listed NYSE
America's Builder

SIDBURY FARMS

NEW HANOVER COUNTY, NORTH CAROLINA

OVERALL UTILITY PLAN

DATE:	02/12/2020
MCE PROJ. #	4245-0012
DRAWN	RAS/JEB
DESIGNED	RAS/JEB
CHECKED	RAM
PROJ. MGR.	RAM

SCALE
HORIZONTAL: 1"=150'
VERTICAL: N/A

M&C FILE NUMBER: CU-100
DRAWING NUMBER: 27

STATUS: TRC SUBMITTAL
REVISION

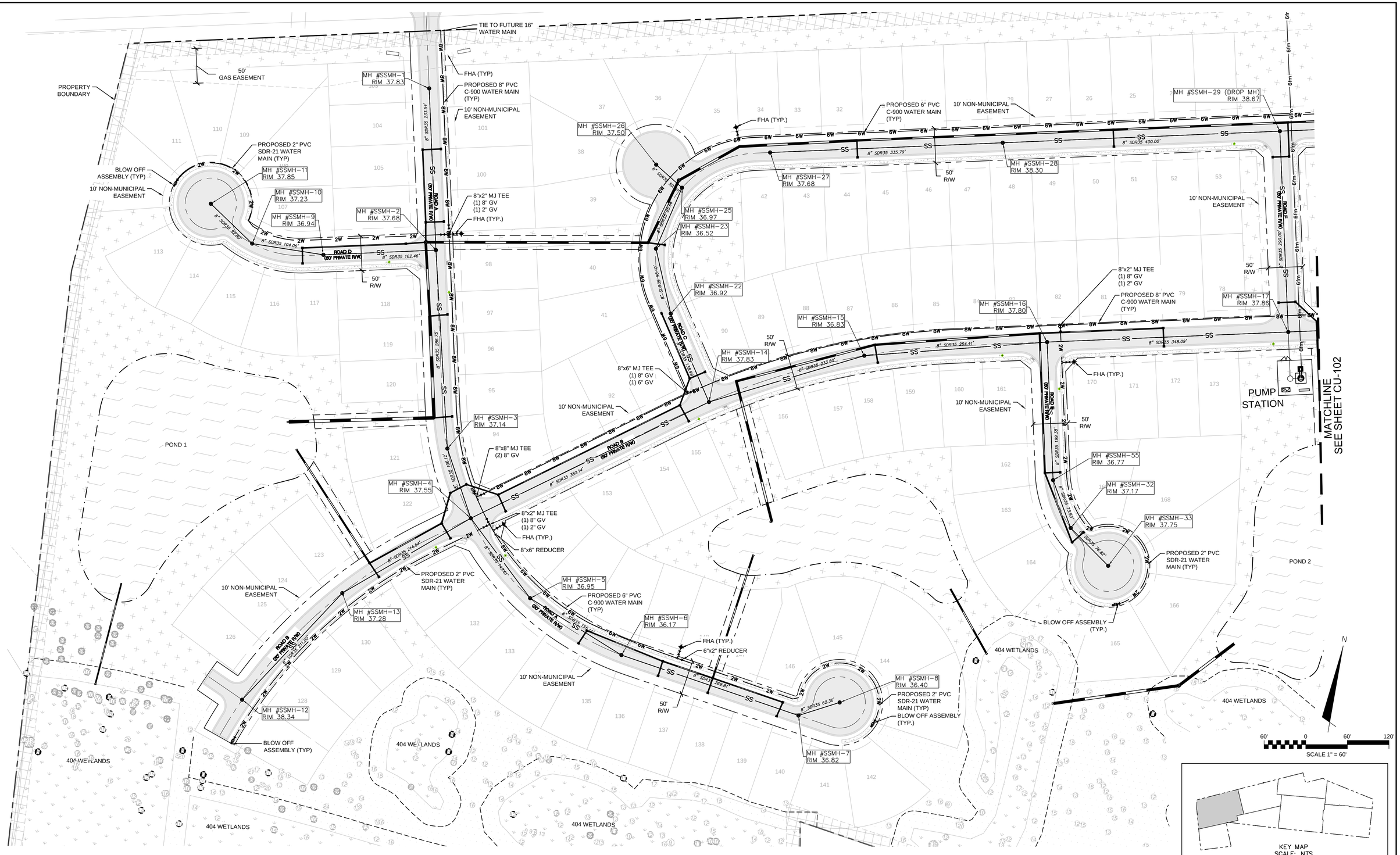

REV.NO.	DESCRIPTIONS	DATE
	REVISIONS	

SEAL

SEAL
NORTH CAROLINA PROFESSIONAL SEAL 025503 ENGINEER RICHARD A. MOORE
5/27/2020

McKIM&CREED
243 North Front Street
Wilmington, North Carolina 28401
Phone: (910)343-1048, Fax: (910)251-8282
License: F-1222
www.mckimcreed.com

D·R·HORTON® DHI Listed NYSE
America's Builder

SIDBURY FARMS

NEW HANOVER COUNTY, NORTH CAROLINA

ENLARGED UTILITY PLAN

DATE:	02/12/2020
MCE PROJ. #	4245-0012
DRAWN	RAS/JEB
DESIGNED	RAS/JEB
CHECKED	RAM
PROJ. MGR.	RAM

SCALE
HORIZONTAL: 1"=60'
VERTICAL: N/A

M&C FILE NUMBER: CU-101
DRAWING NUMBER: 28

STATUS: TRC SUBMITTAL
REVISION

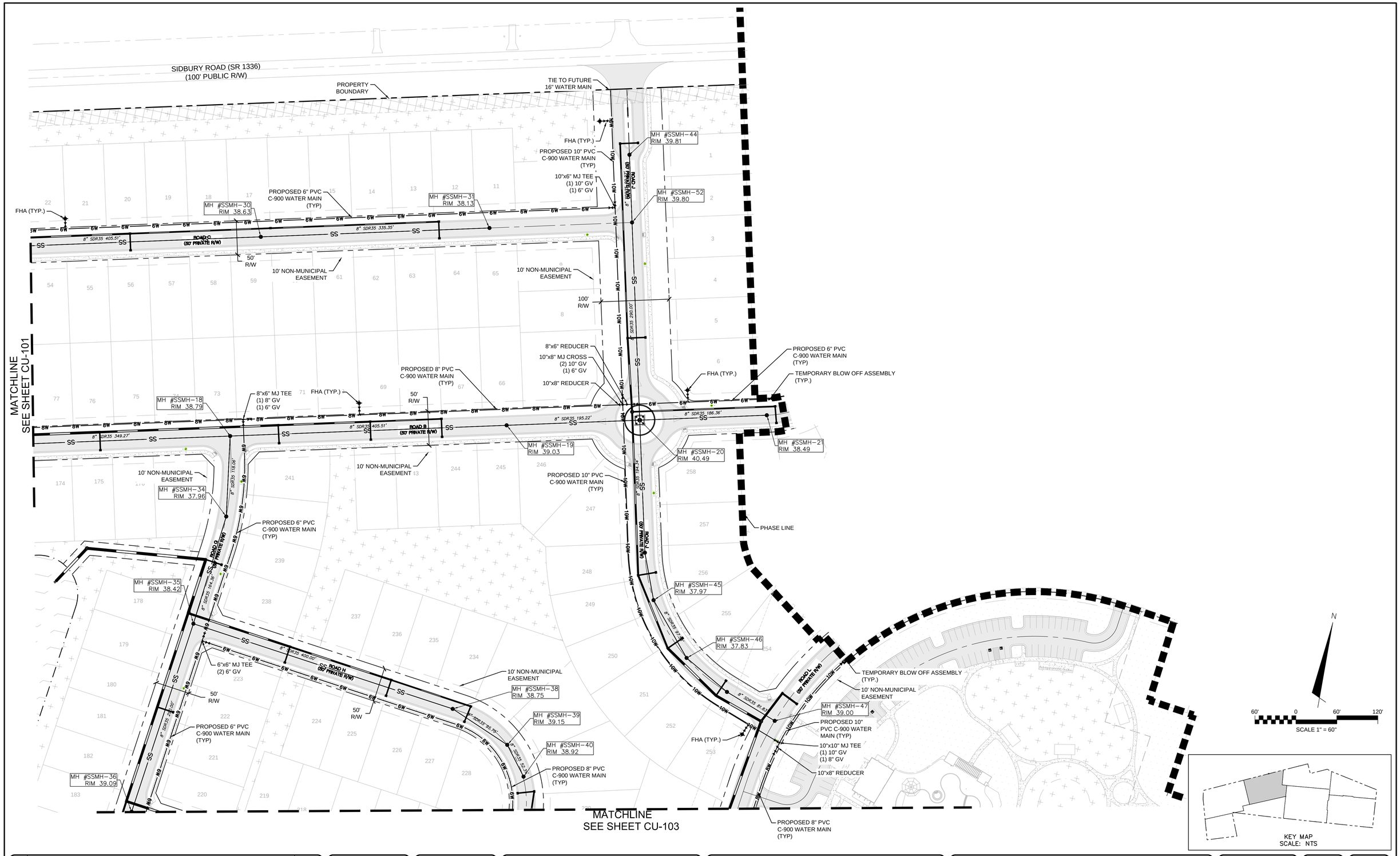

REV.NO.	DESCRIPTIONS	DATE
	REVISIONS	

SEAL

SEAL

NORTH CAROLINA PROFESSIONAL ENGINEER SEAL 025503 RICHARD A. MOORE 5/27/2020

McKIM&CREED
243 North Front Street
Wilmington, North Carolina 28401
Phone: (910)343-1048, Fax: (910)251-8282
License: F-1222
www.mckimcreed.com

D·R·HORTON® DHI Listed NYSE
America's Builder

SIDBURY FARMS

NEW HANOVER COUNTY, NORTH CAROLINA

ENLARGED UTILITY PLAN

DATE:	02/12/2020
MCE PROJ. #	4245-0012
DRAWN	RAS/JEB
DESIGNED	RAS/JEB
CHECKED	RAM
PROJ. MGR.	RAM

SCALE
HORIZONTAL: 1"=60'
VERTICAL: N/A

M&C FILE NUMBER CU-102
DRAWING NUMBER 29

STATUS: TRC SUBMITTAL
REVISION

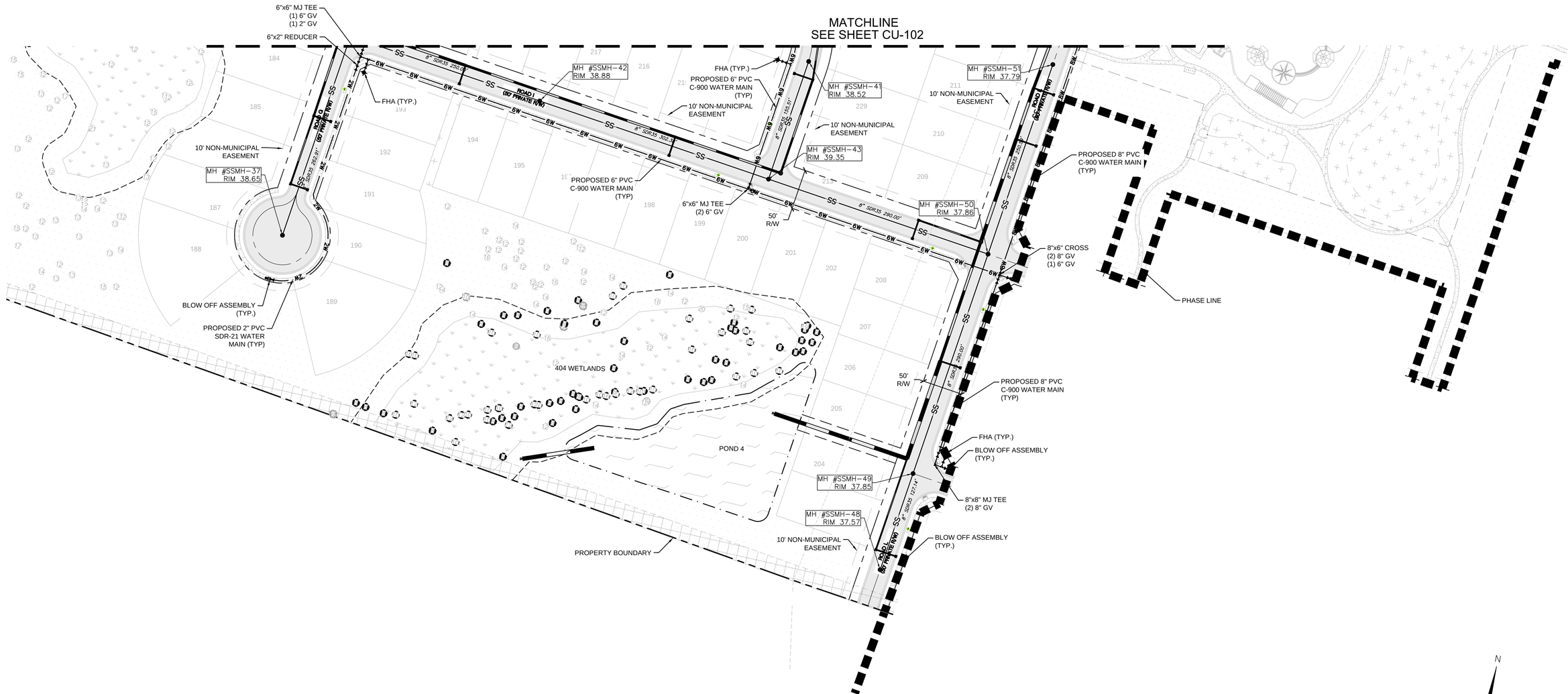

REV.NO.	DESCRIPTIONS	DATE
	REVISIONS	

SEAL

SEAL

NORTH CAROLINA PROFESSIONAL SEAL 025503 ENGINEER RICHARD A. MOORE
5/27/2020

McKIM&CREED
243 North Front Street
Wilmington, North Carolina 28401
Phone: (910)343-1048, Fax: (910)251-8282
License: F-1222
www.mckimcreed.com

D·R·HORTON® DHI Listed NYSE
America's Builder

SIDBURY FARMS

NEW HANOVER COUNTY, NORTH CAROLINA

ENLARGED UTILITY PLAN

DATE:	02/12/2020
MCE PROJ. #	4245-0012
DRAWN	RAS/JEB
DESIGNED	RAS/JEB
CHECKED	RAM
PROJ. MGR.	RAM

SCALE
HORIZONTAL: 1"=60'
VERTICAL: N/A

M&C FILE NUMBER: CU-103
DRAWING NUMBER: 30

STATUS: TRC SUBMITTAL
REVISION

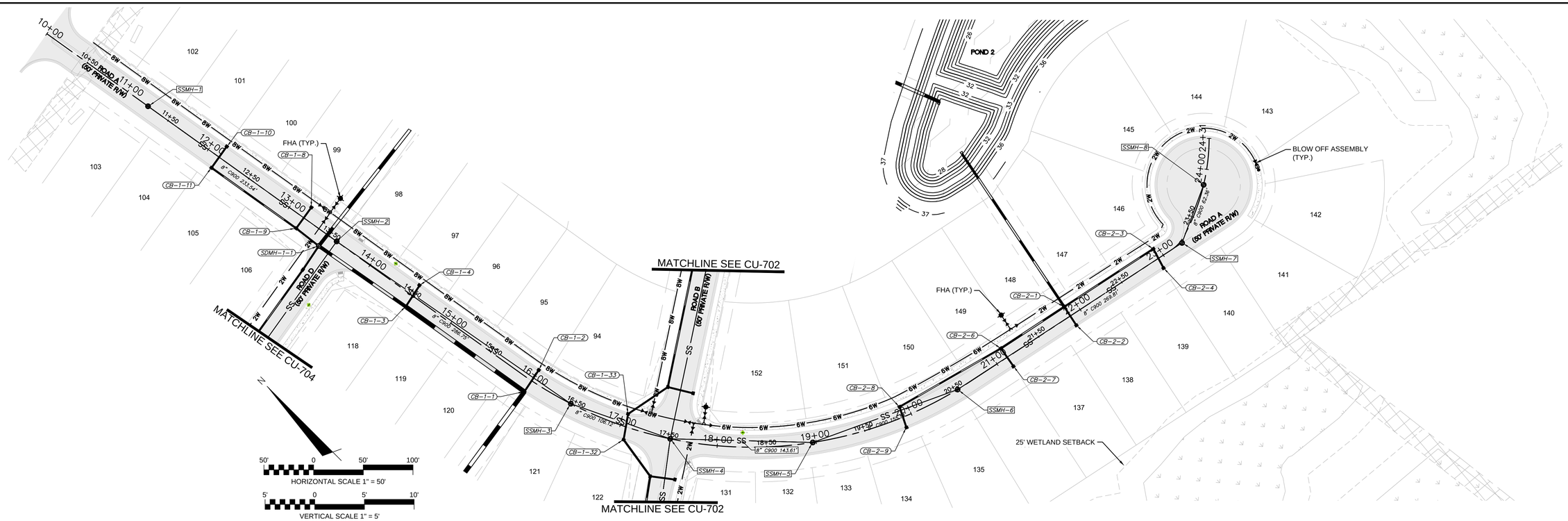

ROAD A

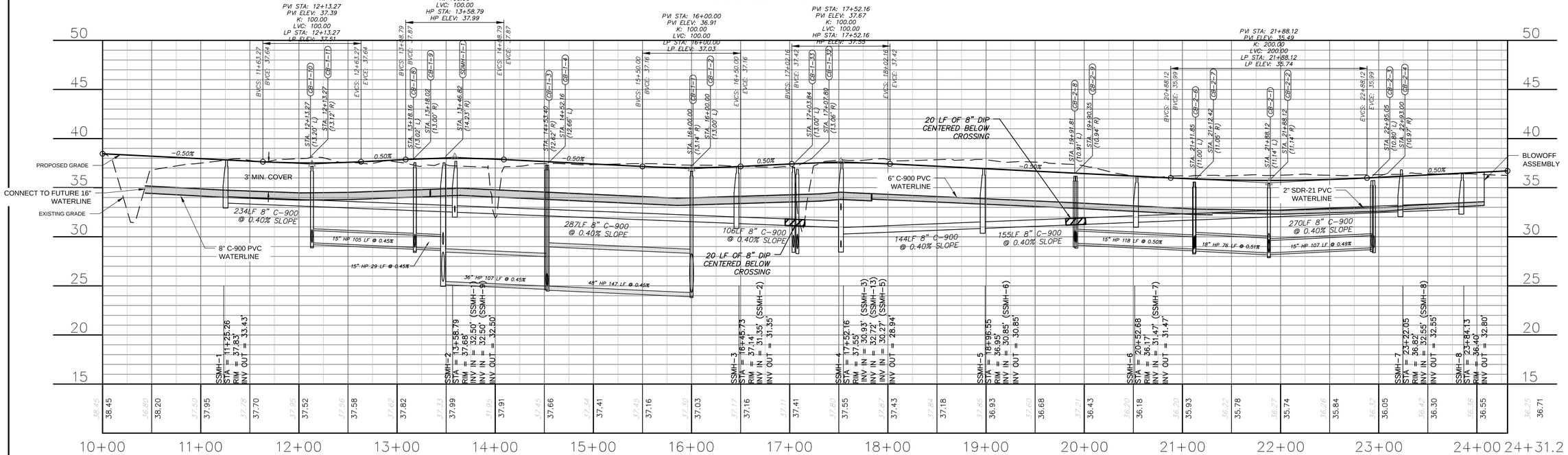

REV.NO.	DESCRIPTIONS REVISIONS	DATE

SEAL

SEAL
NORTH CAROLINA PROFESSIONAL SEAL 025503 ENGINEER RICHARD A. MOORE
5/27/2020

McKIM&CREED
243 North Front Street
Wilmington, North Carolina 28401
Phone: (910)343-1048, Fax: (910)251-8282
License: F-1222
www.mckimcreed.com

D·R·HORTON® DHI Listed NYSE America's Builder

SIDBURY FARMS

NEW HANOVER COUNTY, NORTH CAROLINA

PLAN AND PROFILE
ROAD A STA: 10+00 TO END

DATE:	02/12/2020
MCE PROJ. #	4245-0012
DRAWN	RAS/JEB
DESIGNED	RAS/JEB
CHECKED	RAM
PROJ. MGR.	RAM

SCALE
HORIZONTAL: 1"=50'
VERTICAL: 1"=5'

MAC FILE NUMBER CU-701
DRAWING NUMBER 31

STATUS: TRC SUBMITTAL
REVISION

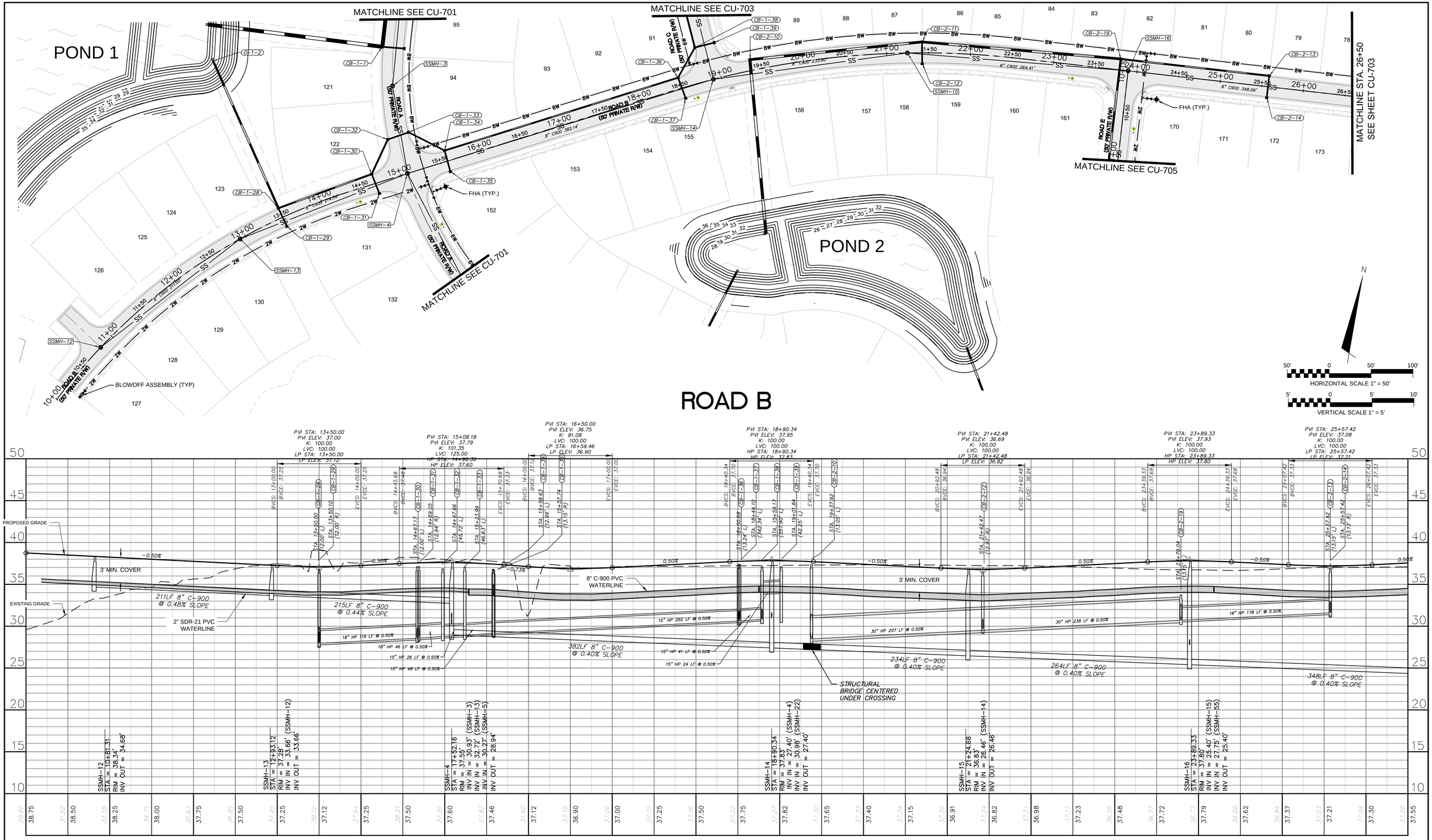

REV.NO.	DESCRIPTIONS	DATE
	REVISIONS	

SEAL

SEAL

NORTH CAROLINA PROFESSIONAL SEAL 025503 ENGINEER RICHARD A. MOORE 5/27/2020

McKIM&CREED
243 North Front Street
Wilmington, North Carolina 28401
Phone: (910)343-1048, Fax: (910)251-8282
License: F-1222
www.mckimcreed.com

D·R·HORTON® DHI Listed NYSE America's Builder

SIDBURY FARMS

NEW HANOVER COUNTY, NORTH CAROLINA

PLAN AND PROFILE
ROAD B STA: 10+00 TO 26+50

DATE:	02/12/2020
MCE PROJ. #	4245-0012
DRAWN	RAS/JEB
DESIGNED	RAS/JEB
CHECKED	RAM
PROJ. MGR.	RAM

SCALE
HORIZONTAL: 1"=50'
VERTICAL: 1"=5'

M&C FILE NUMBER CU-702
DRAWING NUMBER 32

STATUS: TRC SUBMITTAL REVISION

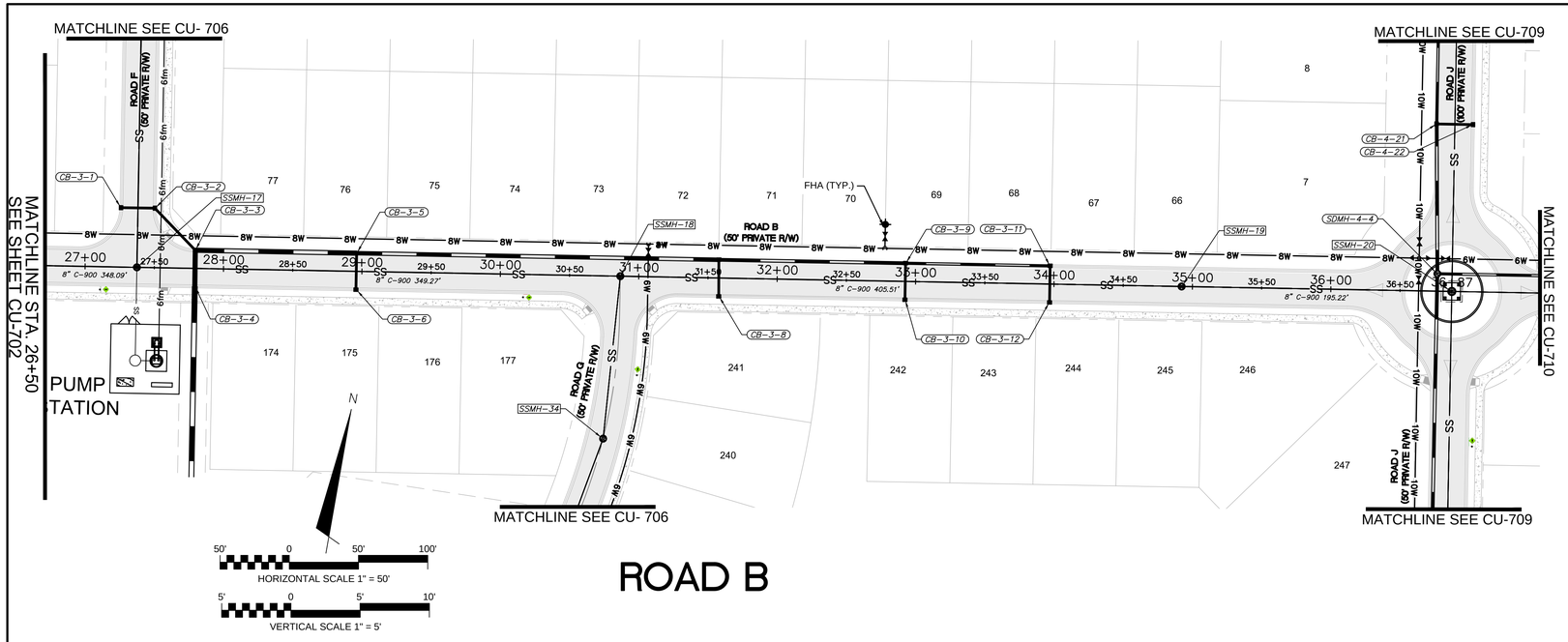

ROAD B

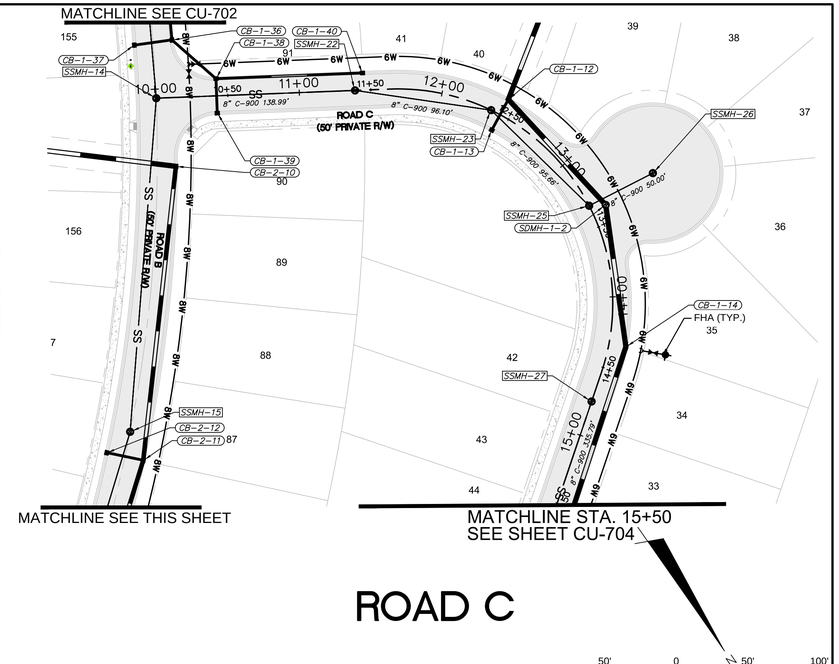

ROAD C

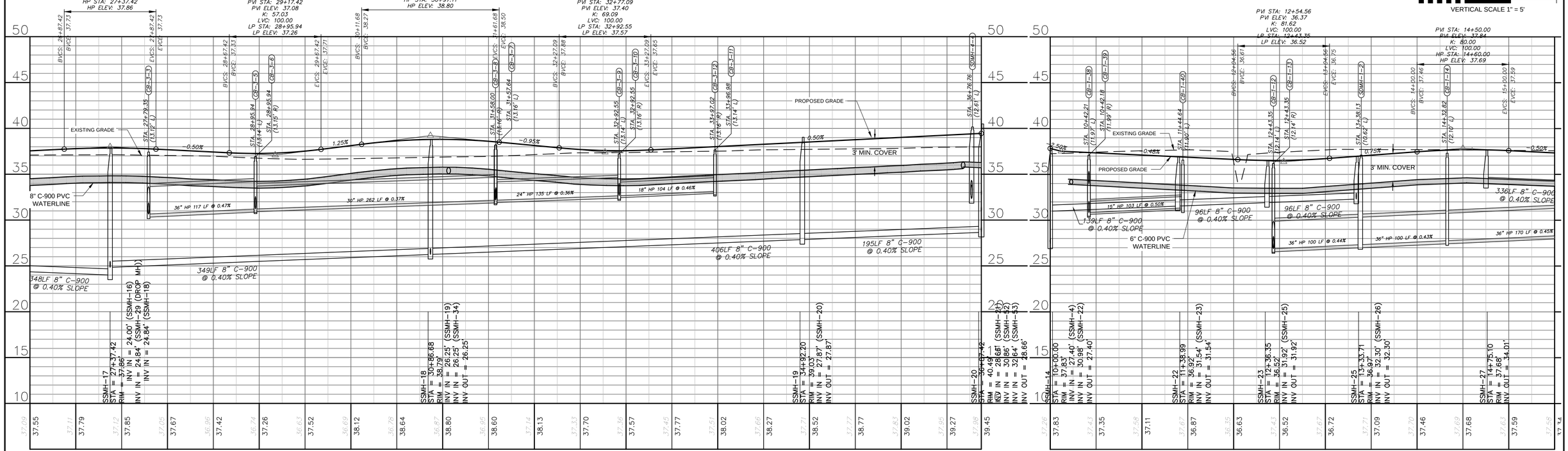

REV.NO. | DESCRIPTIONS | DATE
REVISIONS

SEAL

SEAL
NORTH CAROLINA PROFESSIONAL
SEAL 025503 ENGINEER
RICHARD A. MOORE
5/27/2020

McKIM&CREED
243 North Front Street
Wilmington, North Carolina 28401
Phone: (910)343-1048, Fax: (910)251-8282
License: F-1222
www.mckimcreed.com

D·R·HORTON® DHI Listed NYSE
America's Builder

SIDBURY FARMS
NEW HANOVER COUNTY, NORTH CAROLINA
PLAN AND PROFILE
ROAD B STA: 26+50 TO END
ROAD C STA: 10+00 TO 15+50

DATE:	02/12/2020
MCE PROJ. #	4245-0012
DRAWN	RAS/JEB
DESIGNED	RAS/JEB
CHECKED	RAM
PROJ. MGR.	RAM

SCALE
HORIZONTAL: 1"=50'
VERTICAL: 1"=5'

M&C FILE NUMBER CU-703
DRAWING NUMBER 33

STATUS: TRC SUBMITTAL
REVISION

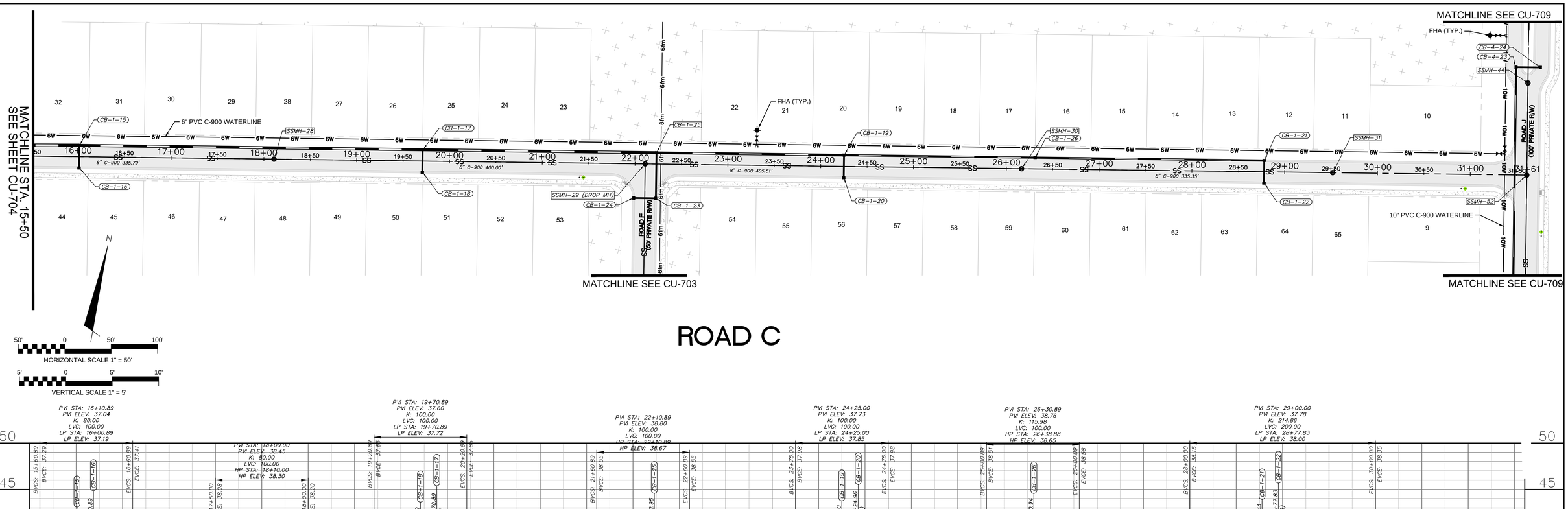

ROAD C

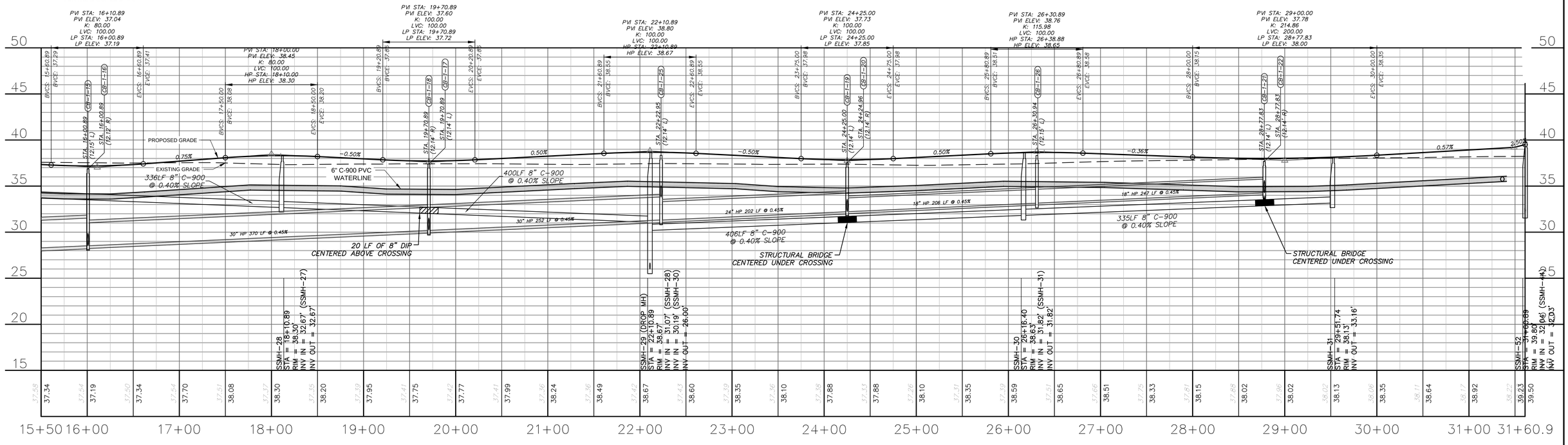

REV.NO.	DESCRIPTIONS	DATE
	REVISIONS	

SEAL

SEAL
NORTH CAROLINA PROFESSIONAL ENGINEER SEAL 025503 RICHARD A. MOORE
5/27/2020

McKIM&CREED
243 North Front Street
Wilmington, North Carolina 28401
Phone: (910)343-1048, Fax: (910)251-8282
License: F-1222
www.mckimcreed.com

D·R·HORTON® DHI Listed NYSE
America's Builder

SIDBURY FARMS

NEW HANOVER COUNTY, NORTH CAROLINA

PLAN AND PROFILE
ROAD C STA 16+00 TO END

DATE:	02/12/2020
MCE PROJ. #	4245-0012
DRAWN	RAS/JEB
DESIGNED	RAS/JEB
CHECKED	RAM
PROJ. MGR.	RAM

SCALE
HORIZONTAL: 1"=50'
VERTICAL: 1"=5'

M&C FILE NUMBER CU-704
DRAWING NUMBER 34

STATUS: TRC SUBMITTAL
REVISION

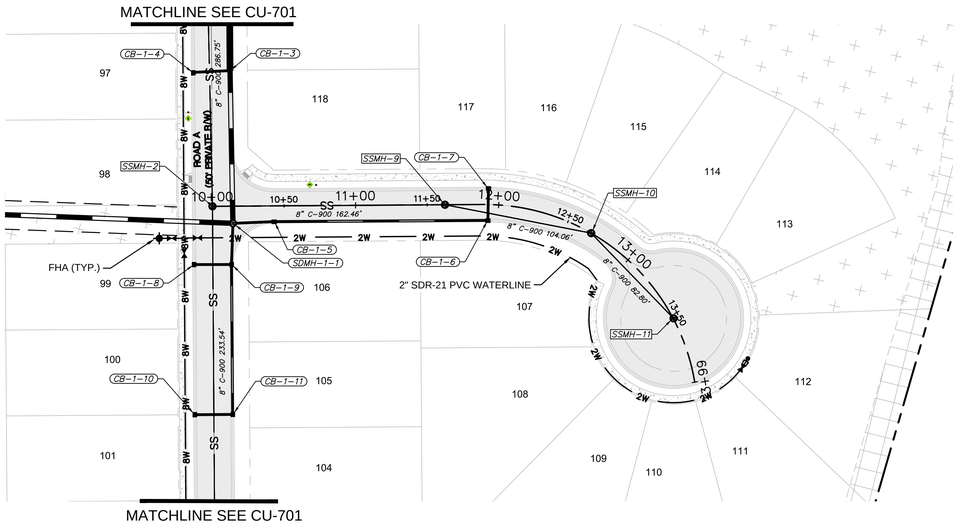

ROAD D

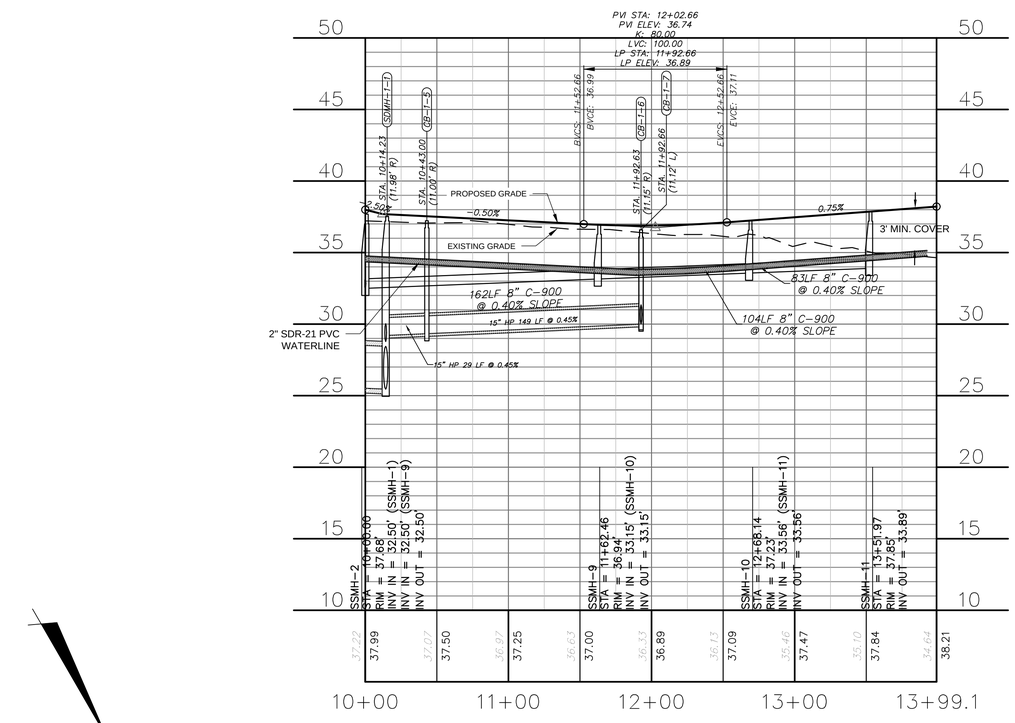

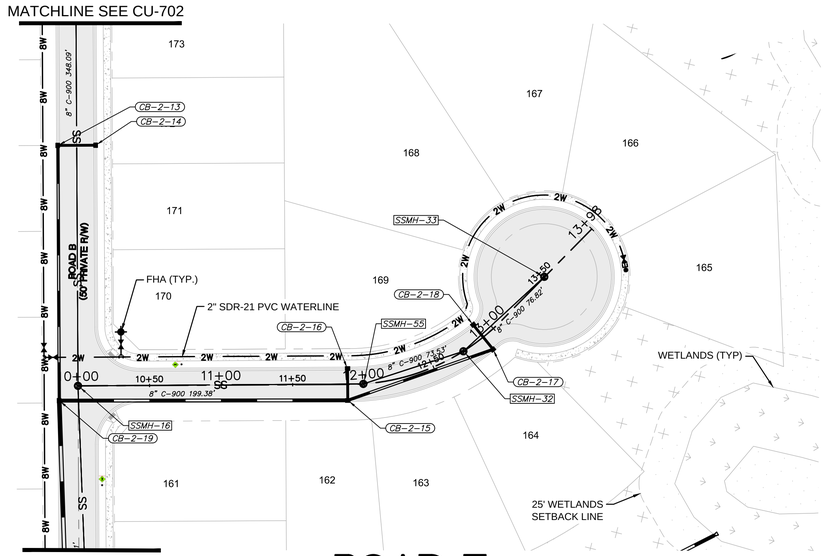

ROAD E

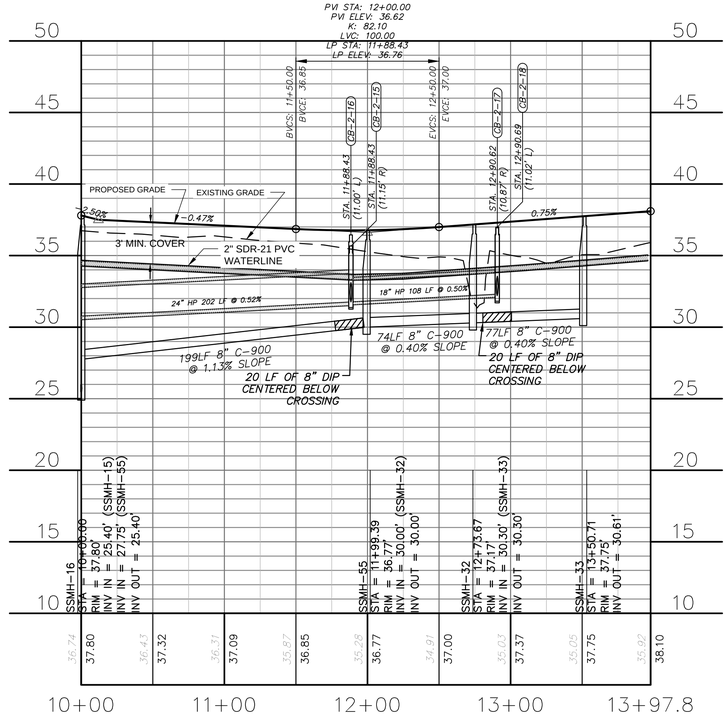

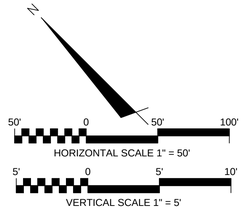

REV.NO.	DESCRIPTIONS	DATE
	REVISIONS	

SEAL

SEAL
NORTH CAROLINA PROFESSIONAL ENGINEER SEAL 025503 RICHARD A. MOORE
5/27/2020

McKIM&CREED
243 North Front Street
Wilmington, North Carolina 28401
Phone: (910)343-1048, Fax: (910)251-8282
License: F-1222
www.mckimcreed.com

D·R·HORTON® DHI Listed NYSE
America's Builder

SIDBURY FARMS

NEW HANOVER COUNTY, NORTH CAROLINA

PLAN AND PROFILE
ROAD D STA 10+00 TO END
ROAD E STA 10+00 TO END

DATE:	02/12/2020
MCE PROJ. #	4245-0012
DRAWN	RAS/JEB
DESIGNED	RAS/JEB
CHECKED	RAM
PROJ. MGR.	RAM

SCALE
HORIZONTAL: 1"=50'
VERTICAL: 1"=5'

M&C FILE NUMBER CU-705
DRAWING NUMBER 35

STATUS: TRC SUBMITTAL
REVISION

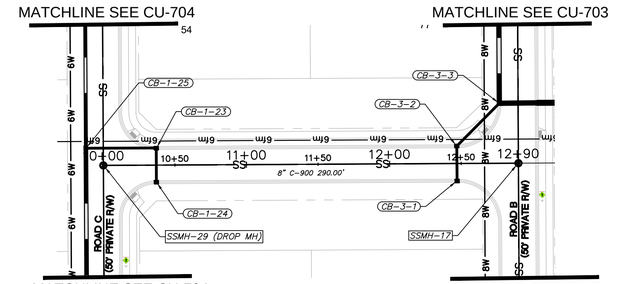

ROAD F

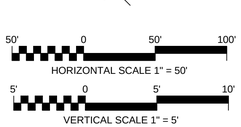

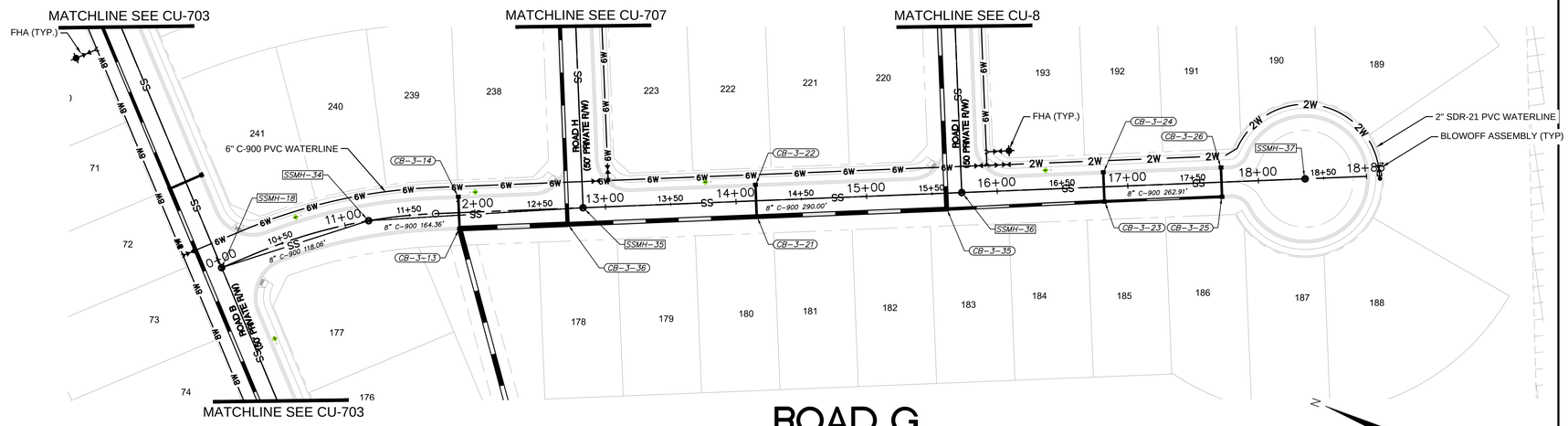

ROAD G

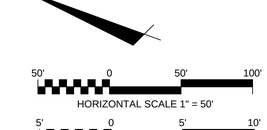

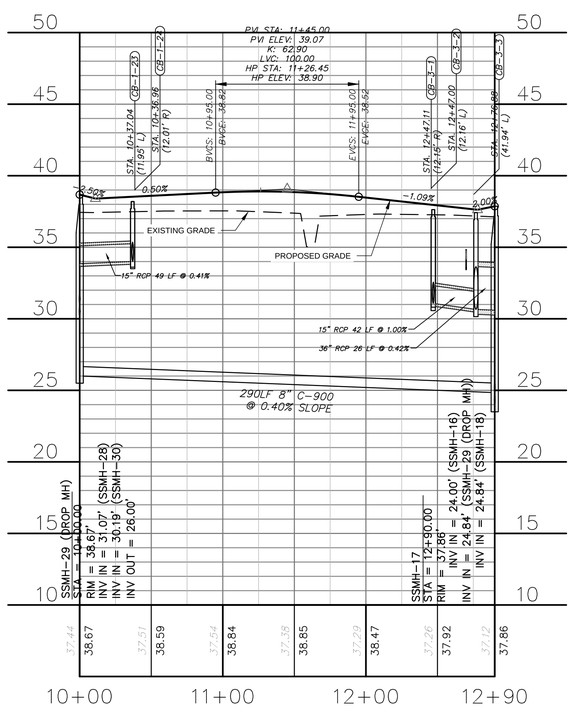

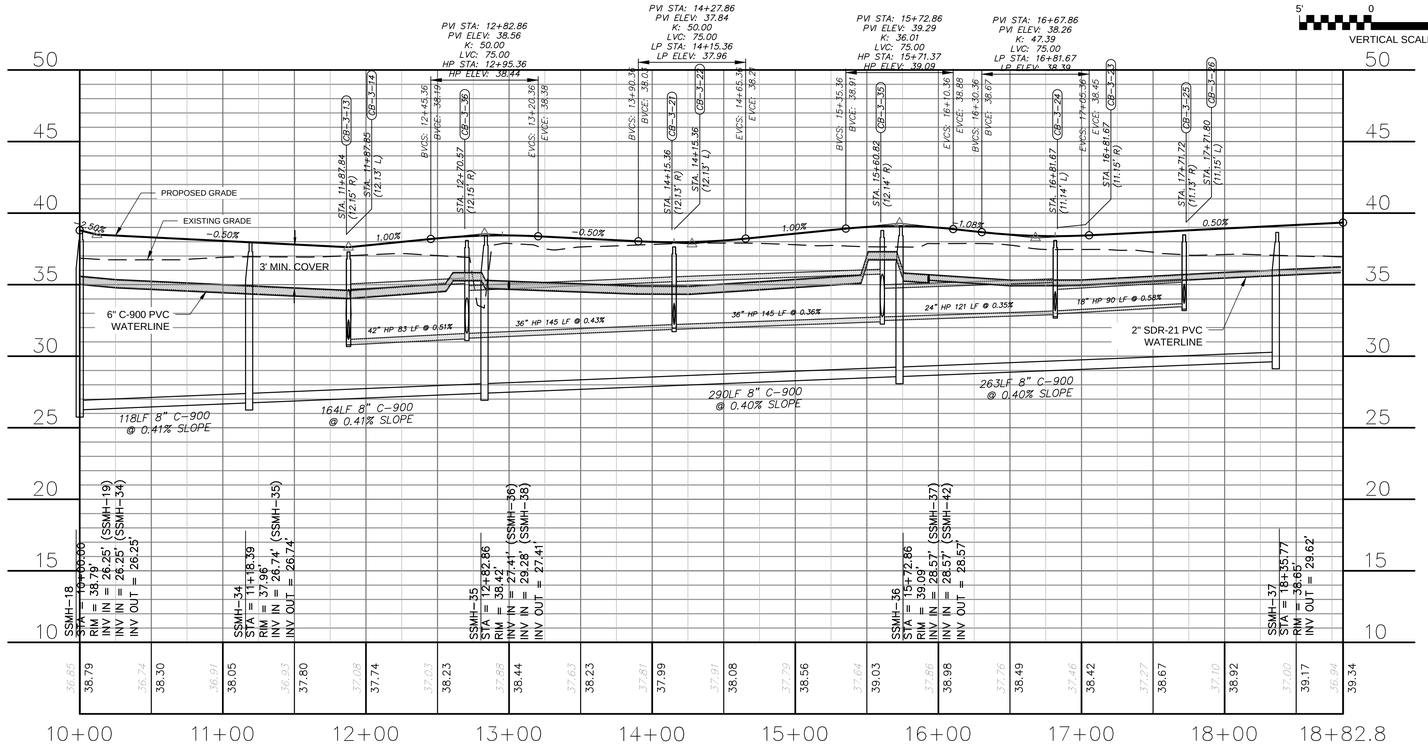

REV.NO.	DESCRIPTIONS REVISIONS	DATE

SEAL

SEAL
NORTH CAROLINA PROFESSIONAL
SEAL 025503 ENGINEER
RICHARD A. MOORE
5/27/2020

McKIM&CREED
243 North Front Street
Wilmington, North Carolina 28401
Phone: (910)343-1048, Fax: (910)251-8282
License: F-1222
www.mckimcreed.com

D·R·HORTON® DHI Listed NYSE
America's Builder

SIDBURY FARMS

NEW HANOVER COUNTY, NORTH CAROLINA

PLAN AND PROFILE
ROAD F STA 10+00 TO END
ROAD G STA 10+00 TO END

DATE:	02/12/2020
MCE PROJ. #	4245-0012
DRAWN	RAS/JEB
DESIGNED	RAS/JEB
CHECKED	RAM
PROJ. MGR.	RAM

SCALE
HORIZONTAL: 1"=50'
VERTICAL: 1"=5'

M&C FILE NUMBER CU-706
DRAWING NUMBER 36

STATUS: TRC SUBMITTAL
REVISION

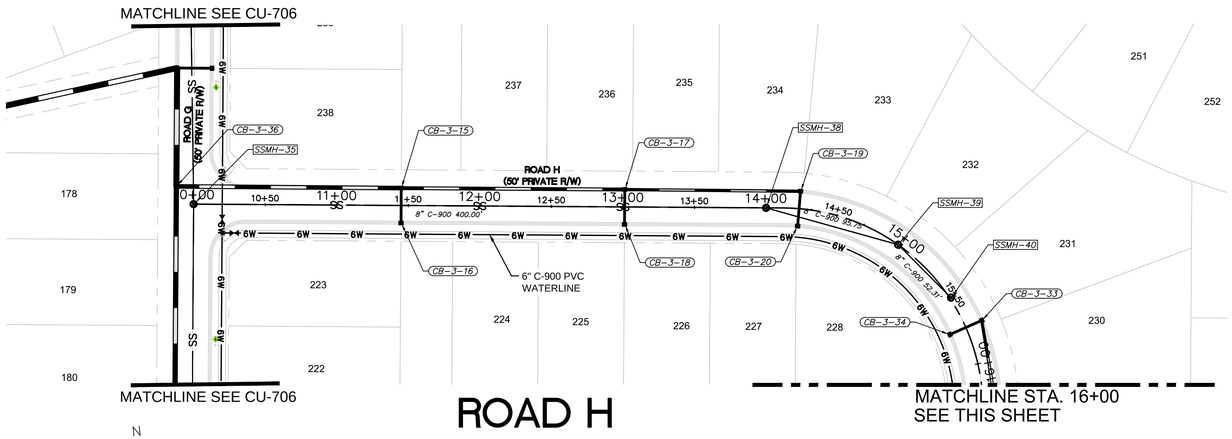

ROAD H

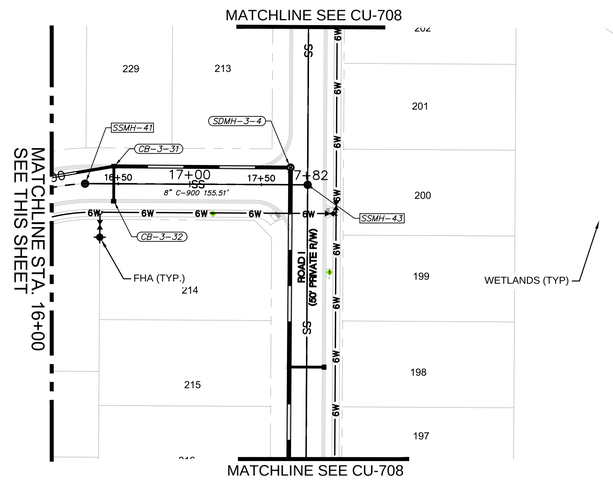

ROAD H

N

50' 0 50' 100'
HORIZONTAL SCALE 1" = 50'

5' 0 5' 10'
VERTICAL SCALE 1" = 5'

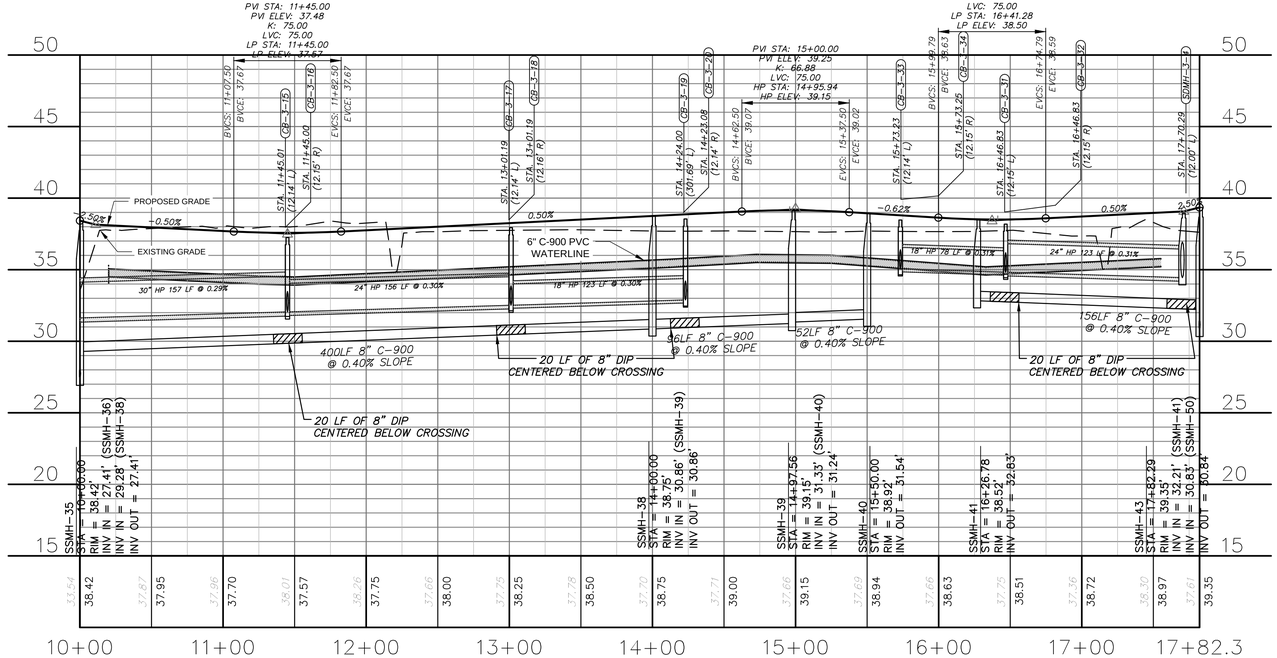

N

50' 0 50' 100'
HORIZONTAL SCALE 1" = 50'

5' 0 5' 10'
VERTICAL SCALE 1" = 5'

REV.NO.	DESCRIPTIONS	DATE
	REVISIONS	

SEAL

SEAL

NORTH CAROLINA PROFESSIONAL SEAL 025503 ENGINEER RICHARD A. MOORE
5/27/2020

McKIM&CREED
243 North Front Street
Wilmington, North Carolina 28401
Phone: (910)343-1048, Fax: (910)251-8282
License: F-1222
www.mckimcreed.com

D·R·HORTON® DHI Listed NYSE
America's Builder

SIDBURY FARMS

NEW HANOVER COUNTY, NORTH CAROLINA

PLAN AND PROFILE
ROAD H STA: 10+00 TO END

DATE:	02/12/2020
MCE PROJ. #	4245-0012
DRAWN	RAS/JEB
DESIGNED	RAS/JEB
CHECKED	RAM
PROJ. MGR.	RAM

SCALE
HORIZONTAL: 1"=50'
VERTICAL: 1"=5'

M&C FILE NUMBER
CU-707
DRAWING NUMBER
37

STATUS: TRC SUBMITTAL
REVISION

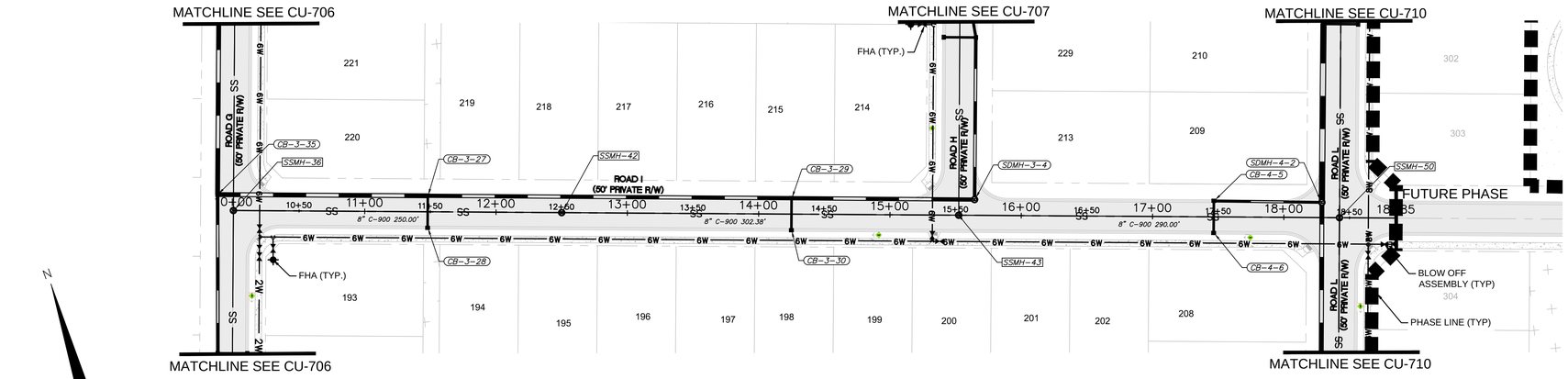

50' 0 50' 100'
HORIZONTAL SCALE 1" = 50'

5' 0 5' 10'
VERTICAL SCALE 1" = 5'

ROAD I

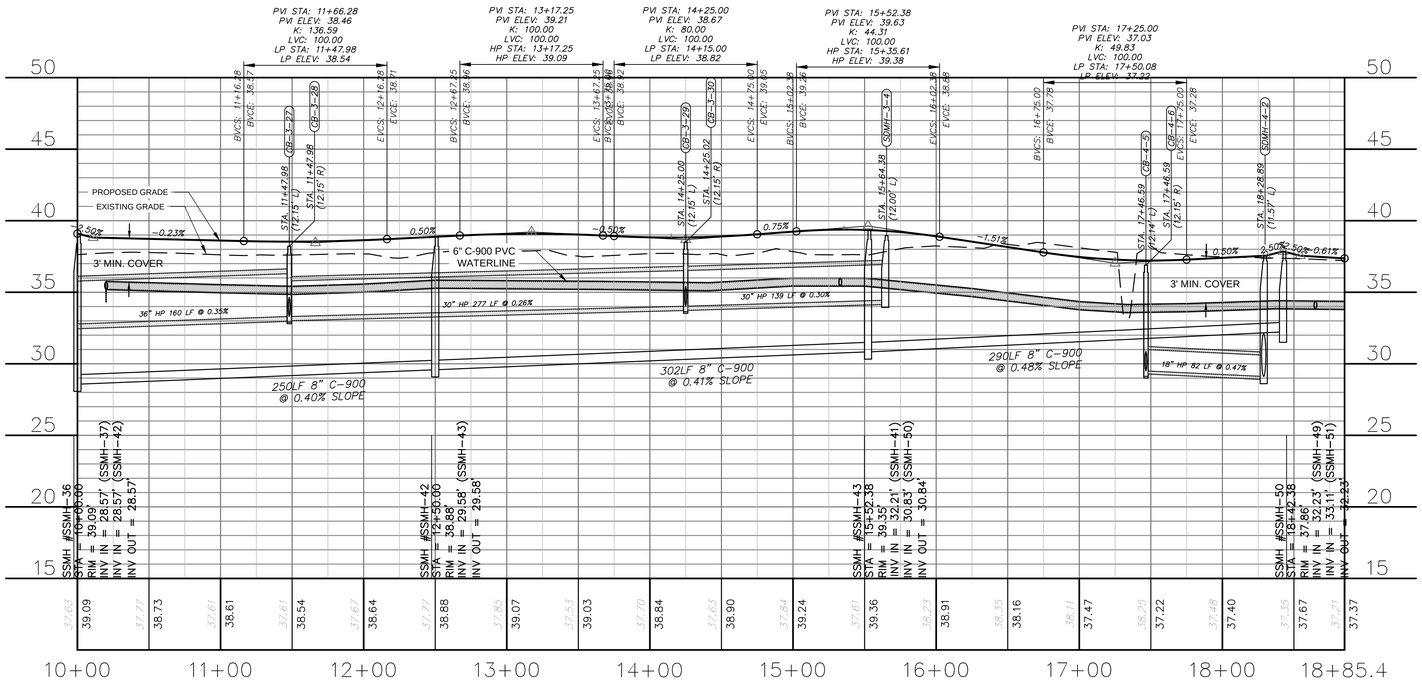

REV.NO.	DESCRIPTIONS	DATE
	REVISIONS	

SEAL

SEAL
NORTH CAROLINA PROFESSIONAL SEAL 025503 ENGINEER RICHARD A. MOORE
5/27/2020

McKIM&CREED
243 North Front Street
Wilmington, North Carolina 28401
Phone: (910)343-1048, Fax: (910)251-8282
License: F-1222
www.mckimcreed.com

D·R·HORTON® DHI Listed NYSE
America's Builder

SIDBURY FARMS

NEW HANOVER COUNTY, NORTH CAROLINA

PLAN AND PROFILE
ROAD I STA: 10+00 TO END

DATE:	02/12/2020
MCE PROJ. #	4245-0012
DRAWN	RAS/JEB
DESIGNED	RAS/JEB
CHECKED	RAM
PROJ. MGR.	RAM

SCALE
HORIZONTAL: 1"=50'
VERTICAL: 1"=5'

M&C FILE NUMBER CU-708
DRAWING NUMBER 38

STATUS: TRC SUBMITTAL
REVISION

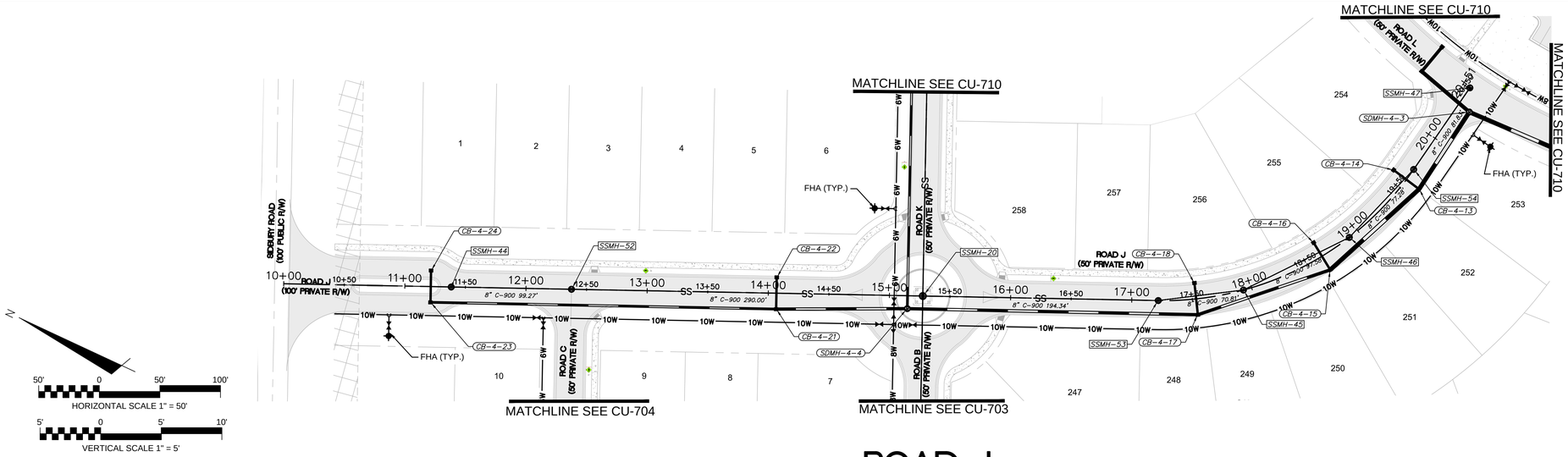

N

50' 0 50' 100'
HORIZONTAL SCALE 1" = 50'

5' 0 5' 10'
VERTICAL SCALE 1" = 5'

ROAD J

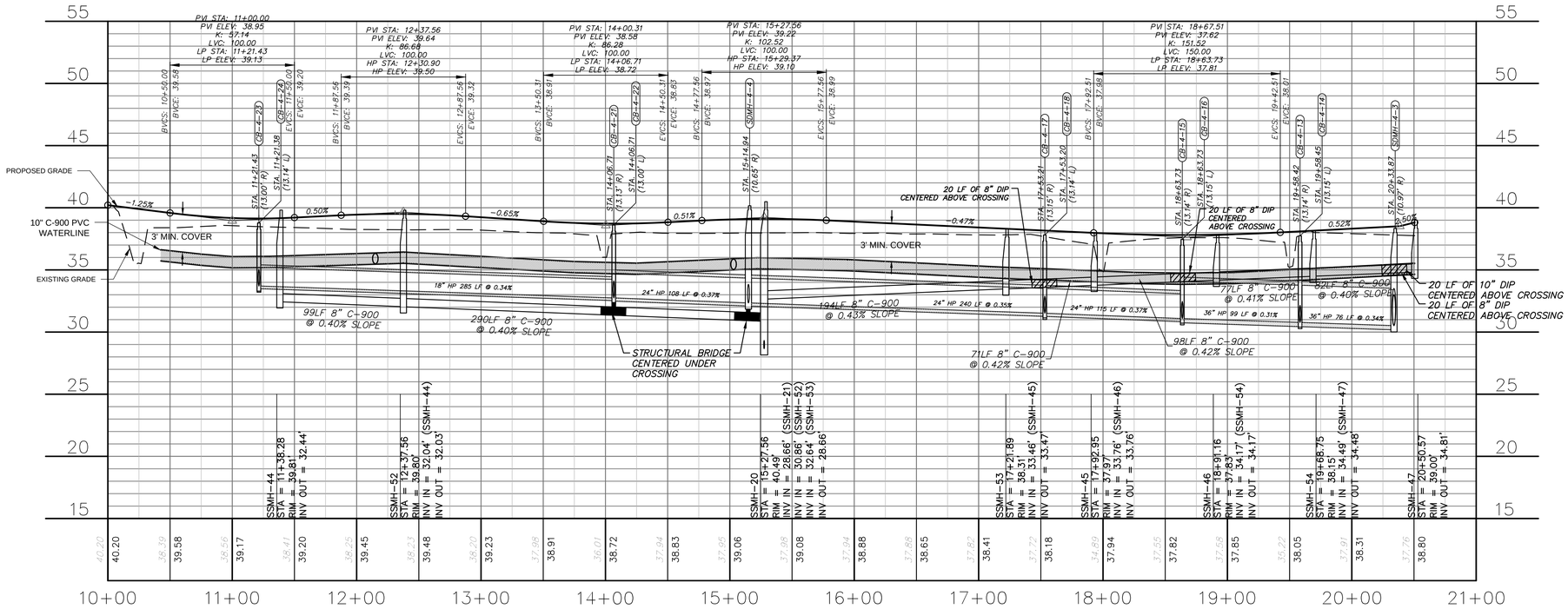

REV.NO.	DESCRIPTIONS	DATE
	REVISIONS	

SEAL

SEAL
NORTH CAROLINA PROFESSIONAL SEAL 025503 ENGINEER RICHARD A. MOORE
5/27/2020

McKIM&CREED
243 North Front Street
Wilmington, North Carolina 28401
Phone: (910)343-1048, Fax: (910)251-8282
License: F-1222
www.mckimcreed.com

D·R·HORTON® DHI Listed NYSE
America's Builder

SIDBURY FARMS

NEW HANOVER COUNTY, NORTH CAROLINA

PLAN AND PROFILE
ROAD J STA: 10+00 TO END

DATE:	02/12/2020
MCE PROJ. #	4245-0012
DRAWN	RAS/JEB
DESIGNED	RAS/JEB
CHECKED	RAM
PROJ. MGR.	RAM

SCALE
HORIZONTAL: 1"=50'
VERTICAL: 1"=5'

M&C FILE NUMBER CU-709
DRAWING NUMBER 39

STATUS: TRC SUBMITTAL REVISION

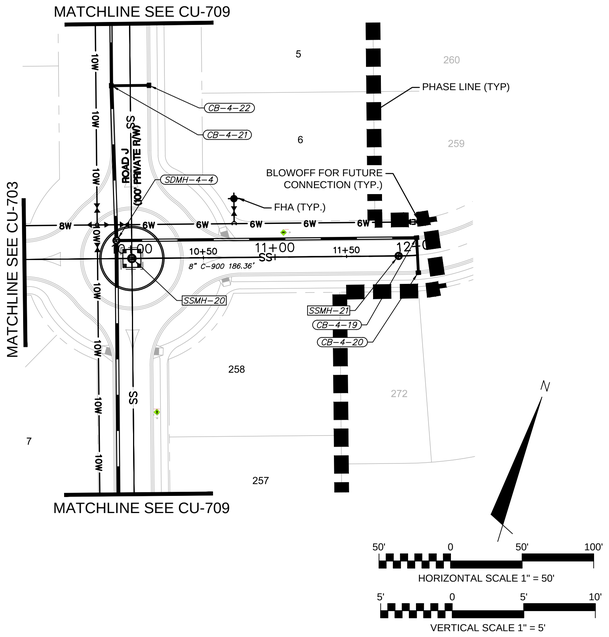

ROAD K

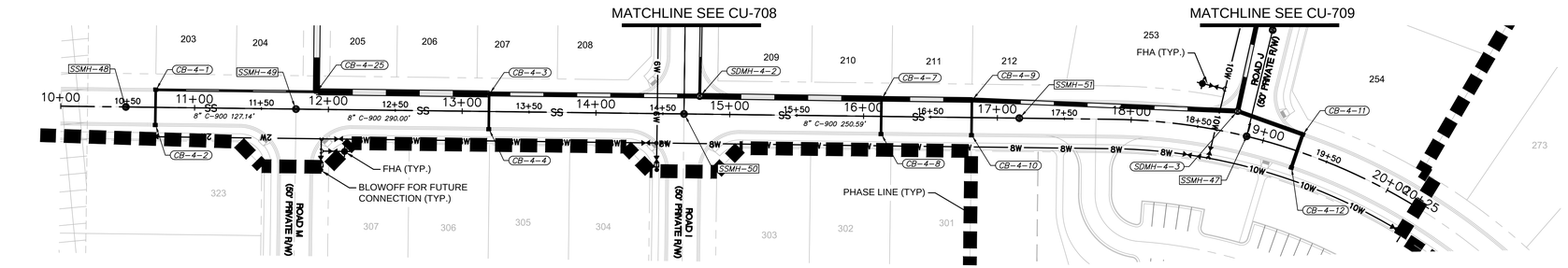

ROAD L

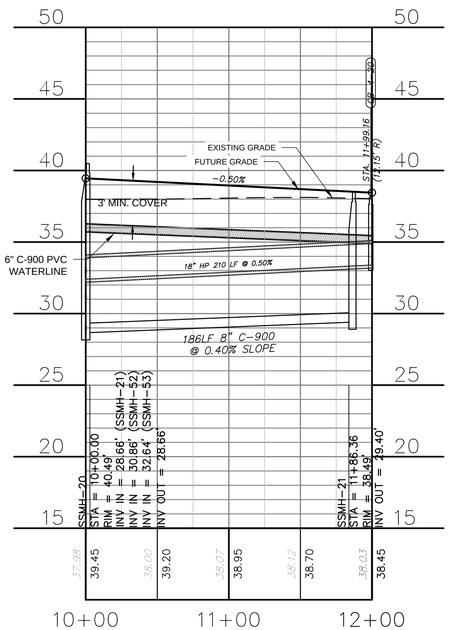

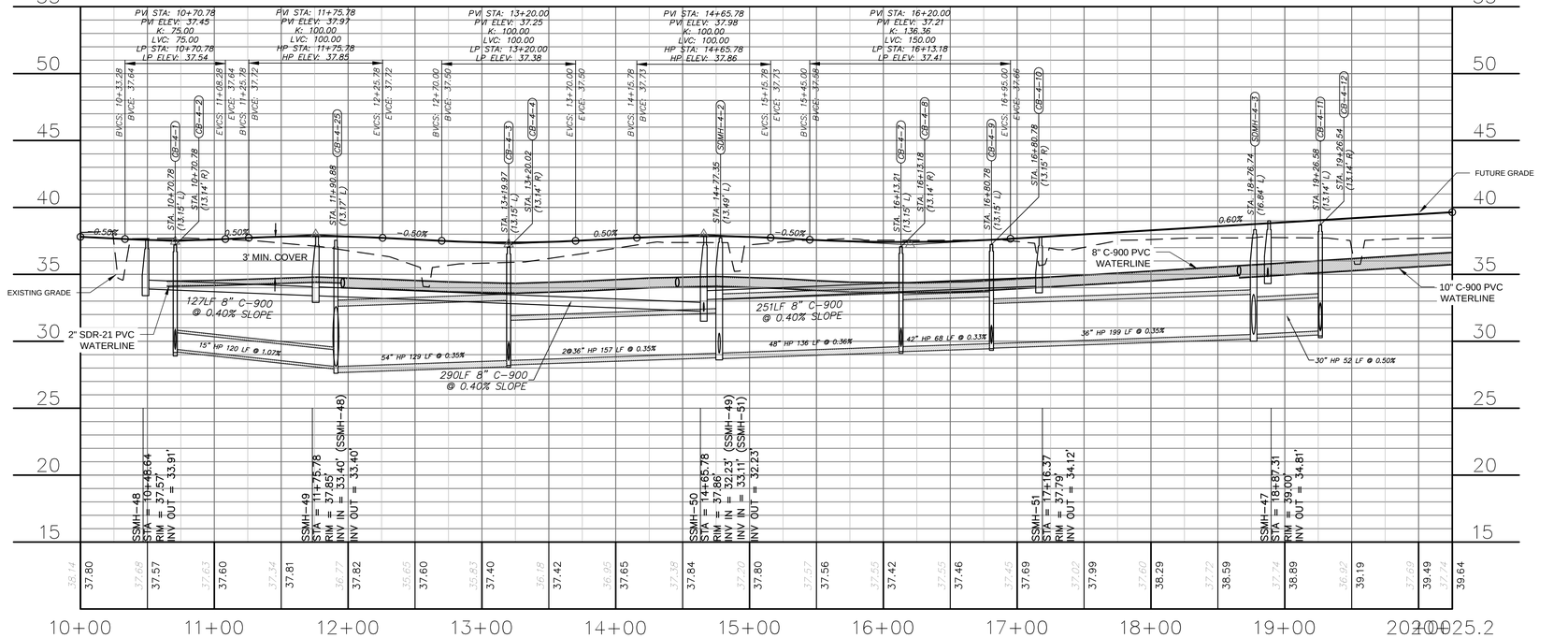

REV.NO.	DESCRIPTIONS REVISIONS	DATE

SEAL

SEAL
NORTH CAROLINA PROFESSIONAL SEAL 025503 ENGINEER RICHARD A. MOORE
5/27/2020

McKIM&CREED
243 North Front Street
Wilmington, North Carolina 28401
Phone: (910)343-1048, Fax: (910)251-8282
License: F-1222
www.mckimcreed.com

D·R·HORTON® DHI Listed NYSE
America's Builder

SIDBURY FARMS

NEW HANOVER COUNTY, NORTH CAROLINA

PLAN AND PROFILE
ROAD K STA: 10+00 TO END
ROAD L STA: 10+00 TO END

DATE:	02/12/2020
MCE PROJ. #	4245-0012
DRAWN	RAS/JEB
DESIGNED	RAS/JEB
CHECKED	RAM
PROJ. MGR.	RAM

SCALE
HORIZONTAL: 1"=50'
VERTICAL: 1"=5'

M&C FILE NUMBER CU-710
DRAWING NUMBER 40

STATUS: TRC SUBMITTAL
REVISION

KEY MAP
SCALE: NTS

2 OVERALL LANDSCAPE PLAN 1" = 200'-0"

PLANT SCHEDULE

TREES	CODE	BOTANICAL / COMMON NAME
⊙	QUE PHE	QUERCUS PHELLOS WILLOW OAK
⊙	QUE SHU	QUERCUS SHUMARDII SHUMARD RED OAK
⊙	QUE VIR	QUERCUS VIRGINIANA SOUTHERN LIVE OAK
⬡	ULM ALL	ULMUS PARVIFOLIA `ALLEE` ALLEE LACEBARK ELM
⊙	ZEL VIL	ZELKOVA SERRATA `VILLAGE GREEN` SAWLEAF ZELKOVA

NOTES:
-ALL STREET TREES LOCATED ON PRIVATE PROPERTY
-ALL STREET TREES LOCATED OUTSIDE NCDOT 10'x70' SIGHT DISTANCE TRIANGLE

N

200' 0 200' 400'
SCALE 1" = 200'

1 LEGEND AND NOTES SCALE: NTS

REV.NO.	DESCRIPTIONS	DATE
	REVISIONS	

SEAL

SEAL
NORTH CAROLINA PROFESSIONAL ENGINEER SEAL 025503 RICHARD A. MOORE
5/27/2020

McKIM&CREED
243 North Front Street
Wilmington, North Carolina 28401
Phone: (910)343-1048, Fax: (910)251-8282
License: F-1222
www.mckimcreed.com

D·R·HORTON® DHI Listed NYSE
America's Builder

SIDBURY FARMS
NEW HANOVER COUNTY, NORTH CAROLINA
OVERALL LANDSCAPE PLAN

DATE:	02/12/2020
MCE PROJ. #	4245-0012
DRAWN	RAS/JEB
DESIGNED	RAS/JEB
CHECKED	RAM
PROJ. MGR.	RAM

SCALE
HORIZONTAL: 1"=300'
VERTICAL: N/A

MAC FILE NUMBER: CL-100
DRAWING NUMBER: 41

STATUS: TRC SUBMITTAL
REVISION

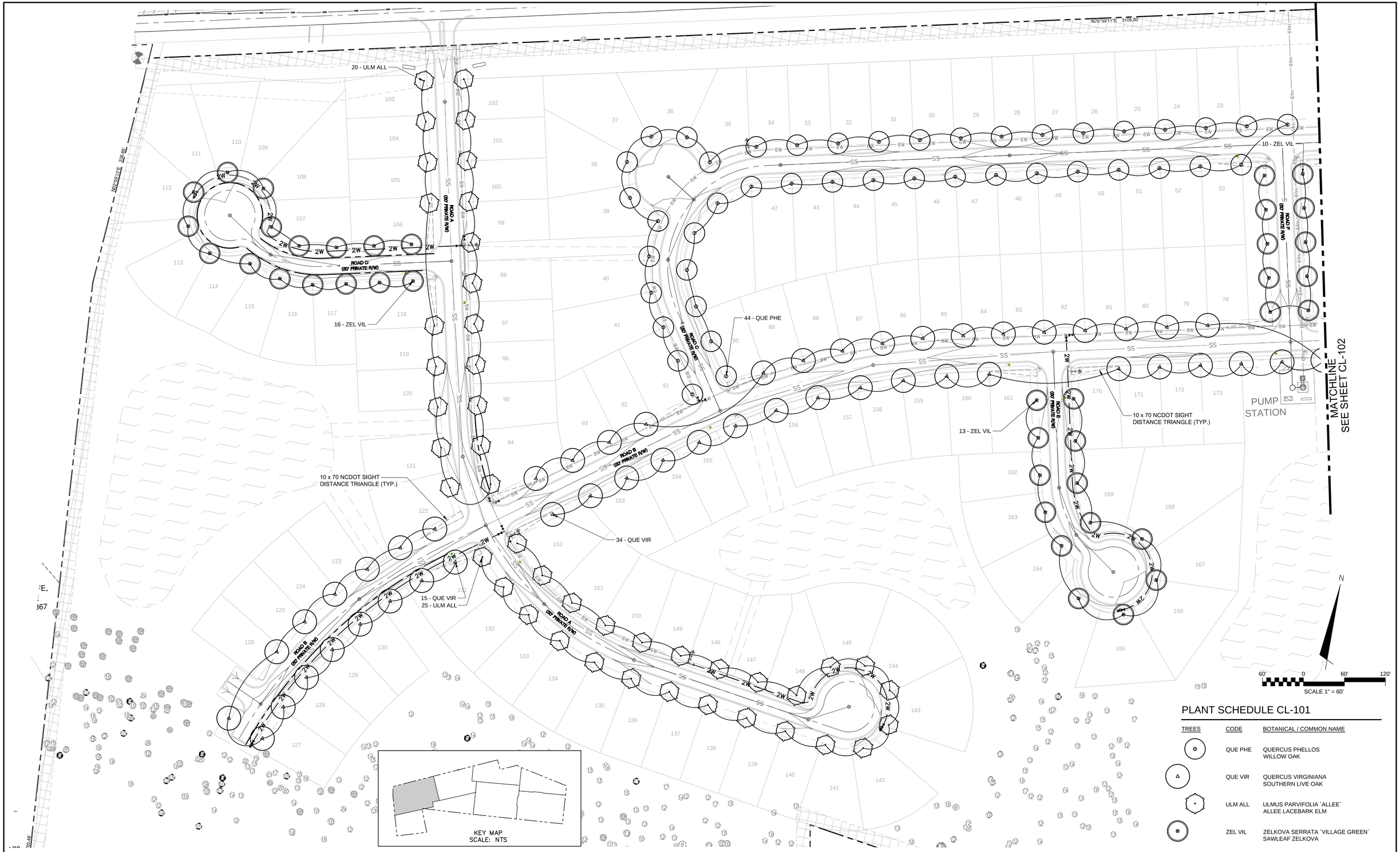

PLANT SCHEDULE CL-101

TREES	CODE	BOTANICAL / COMMON NAME
	QUE PHE	QUERCUS PHELLOS WILLOW OAK
	QUE VIR	QUERCUS VIRGINIANA SOUTHERN LIVE OAK
	ULM ALL	ULMUS PARVIFOLIA `ALLEE` ALLEE LACEBARK ELM
	ZEL VIL	ZELKOVA SERRATA `VILLAGE GREEN` SAWLEAF ZELKOVA

REV.NO.	DESCRIPTIONS	DATE
	REVISIONS	

SEAL

SEAL
NORTH CAROLINA PROFESSIONAL SEAL 025503 ENGINEER RICHARD A. MOORE
5/27/2020

McKIM&CREED
243 North Front Street
Wilmington, North Carolina 28401
Phone: (910)343-1048, Fax: (910)251-8282
License: F-1222
www.mckimcreed.com

D·R·HORTON® DHI Listed NYSE
America's Builder

SIDBURY FARMS
NEW HANOVER COUNTY, NORTH CAROLINA
ENLARGED LANDSCAPE PLAN

DATE:	02/12/2020
MCE PROJ. #	4245-0012
DRAWN	RAS/JEB
DESIGNED	RAS/JEB
CHECKED	RAM
PROJ. MGR.	RAM

SCALE
HORIZONTAL: 1"=60'
VERTICAL: N/A

M&C FILE NUMBER CL-101
DRAWING NUMBER 42

STATUS: TRC SUBMITTAL
REVISION

PLANT SCHEDULE CL-102

TREES	CODE	BOTANICAL / COMMON NAME
	QUE PHE	QUERCUS PHELLOS WILLOW OAK
	QUE SHU	QUERCUS SHUMARDII SHUMARD RED OAK
	QUE VIR	QUERCUS VIRGINIANA SOUTHERN LIVE OAK
	ULM ALL	ULMUS PARVIFOLIA `ALLEE` ALLEE LACEBARK ELM

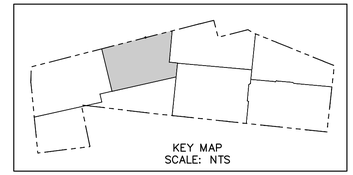

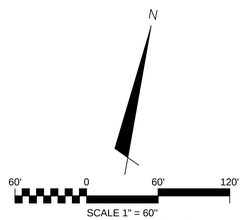

REV.NO.	DESCRIPTIONS	DATE
	REVISIONS	

SEAL

SEAL

NORTH CAROLINA PROFESSIONAL SEAL 025503 ENGINEER RICHARD A. MOORE
5/27/2020

McKIM&CREED
243 North Front Street
Wilmington, North Carolina 28401
Phone: (910)343-1048, Fax: (910)251-8282
License: F-1222
www.mckimcreed.com

D·R·HORTON® DHI Listed NYSE
America's Builder

SIDBURY FARMS

NEW HANOVER COUNTY, NORTH CAROLINA

ENLARGED LANDSCAPE PLAN

DATE:	02/12/2020
MCE PROJ. #	4245-0012
DRAWN	RAS/JEB
DESIGNED	RAS/JEB
CHECKED	RAM
PROJ. MGR.	RAM

SCALE
HORIZONTAL: 1"=60'
VERTICAL: N/A

M&C FILE NUMBER CL-102
DRAWING NUMBER 43

STATUS: TRC SUBMITTAL
REVISION

MATCHLINE
SEE SHEET CL-102

N

60' 0 60' 120'

SCALE 1" = 60'

PLANT SCHEDULE CL-103

TREES	CODE	BOTANICAL / COMMON NAME
	QUE PHE	QUERCUS PHELLOS WILLOW OAK
	QUE SHU	QUERCUS SHUMARDII SHUMARD RED OAK
	QUE VIR	QUERCUS VIRGINIANA SOUTHERN LIVE OAK
	ULM ALL	ULMUS PARVIFOLIA `ALLEE` ALLEE LACEBARK ELM
	ZEL VIL	ZELKOVA SERRATA `VILLAGE GREEN` SAWLEAF ZELKOVA

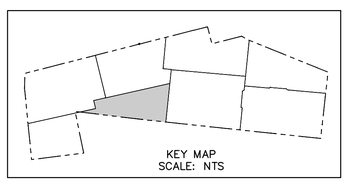

REV.NO.	DESCRIPTIONS REVISIONS	DATE

SEAL

SEAL
NORTH CAROLINA PROFESSIONAL SEAL 025503 ENGINEER RICHARD A. MOORE
5/27/2020

McKIM&CREED
243 North Front Street
Wilmington, North Carolina 28401
Phone: (910)343-1048, Fax: (910)251-8282
License: F-1222
www.mckimcreed.com

D·R·HORTON® DHI Listed NYSE
America's Builder

SIDBURY FARMS

NEW HANOVER COUNTY, NORTH CAROLINA

ENLARGED LANDSCAPE PLAN

DATE:	02/12/2020
MCE PROJ. #	4245-0012
DRAWN	RAS/JEB
DESIGNED	RAS/JEB
CHECKED	RAM
PROJ. MGR.	RAM

SCALE
HORIZONTAL: 1"=60'
VERTICAL: N/A

M&C FILE NUMBER CL-103
DRAWING NUMBER 44

STATUS: TRC SUBMITTAL
REVISION

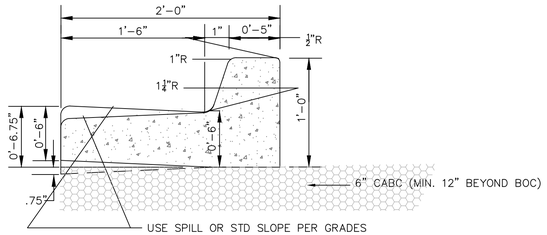

6 STANDARD 24" CURB SECTION SCALE: NTS

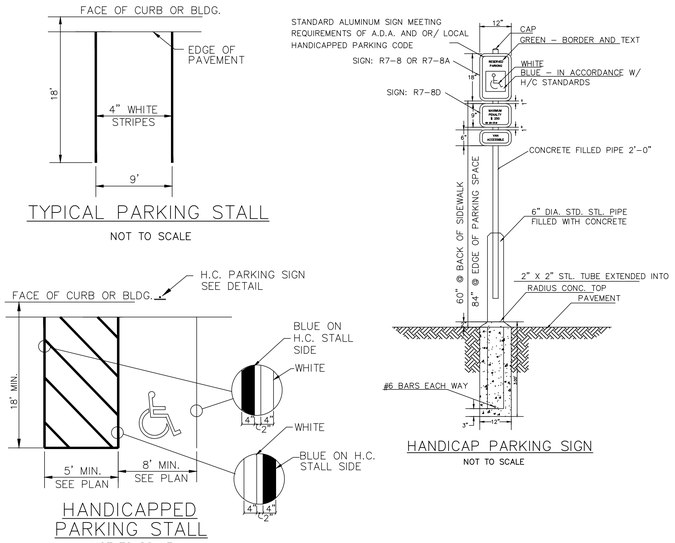

4 HANDICAP PARKING DETAILS SCALE: NTS

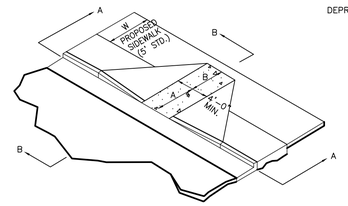

ISOMETRIC VIEW

W	A	W+A+9"	X	B
5'	0.0'	5.8'	5.8'	5.0'*
6'	0.0'	6.8'	6.8'	6.0'**
5'	0.0'	7.8'	7.3'	6.5'**
6'	0.0'	8.8'	7.3'	6.5'**
5'	2.0'	7.8'	7.8'	5.0'
5'	2.5'	8.3'	8.1'	4.8'
5'	3.0'	8.8'	8.3'	4.4'
5'	3.5'	9.3'	8.4	4.1'
5'	4.0'	9.8'	8.6	3.8'
5'	4.5'	10.3'	8.7	3.4'
5'	5.0'	10.8'	8.9	3.1'

B = X–(A+9")
B = DISTANCE FROM FRONT EDGE OF SIDEWALK TO BACK POINT OF 12:1 (8.33%) SLOPE.
* BACK OF SIDEWALK DROP REQUIRED FOR ALL SIDEWALK SLOPES.
** BACK OF SIDEWALK DROP REQUIRED FOR SIDEWALK SLOPES 0.04.

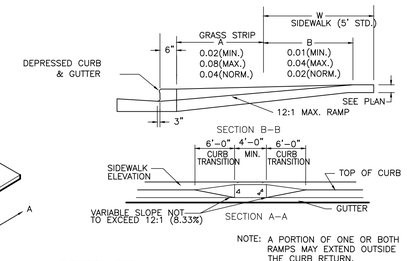

NOTE: A PORTION OF ONE OR BOTH RAMPS MAY EXTEND OUTSIDE THE CURB RETURN.

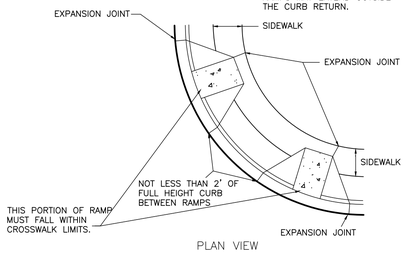

PLAN VIEW

2 HANDICAP ACCESSIBILTY RAMP SCALE: NTS

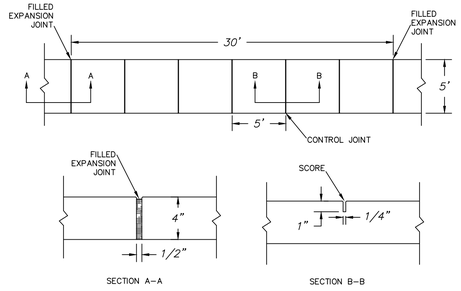

NOTES:

1. JOINT MATERIAL TO COMPLY WITH CURRENT NCDOT STANDARDS.
2. SANITARY SEWER CLEAN–OUTS, WATER METERS, MANHOLES, AND VALVE LIDS TO BE LOCATED OUTSIDE SIDEWALK WHERE FEASIBLE.
3. MINIMUM SIDEWALK WIDTH TO BE 6' MINIMUM IF PLACED AT BACK OF CURB.
4. CONCRETE FOR ALL SIDEWALKS (EXCEPT ANY PORTION CONTAIN WITHIN A DRIVEWAY APRON) SHALL BE CLASS "A" – 3,000 PSI.
5. MINIMUM REPLACEMENT FOR REPAIRS IS A 5' X 5' PANEL
6. 4" STONE BASE MAY BE REQUIRED FOR POOR SOIL CONDITIONS
7. MINIMUM DEPTH FOR TUNNELING BELOW SIDEWALK IS 12"
8. MAX ADJACENT GROUND SLOPE WITHOUT RAILING IS 2:1
9. MIN GRADE FOR PROPER DRAINAGE IS 1% IN AT LEAST 1 DIRECTION. MAX CROSS SLOPE IS 2%. MAX LONGITUDINAL SLOPE IS 8.33%, 10% IF LIMITED BY EXISTING CONDITIONS, OR NO GREATER THAN THE SLOPE OF THE EXISTING ADJACENT ROAD.

5 SIDEWALK DETAIL SCALE: NTS

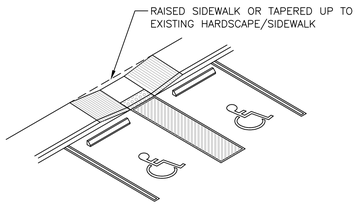

ISOMETRIC

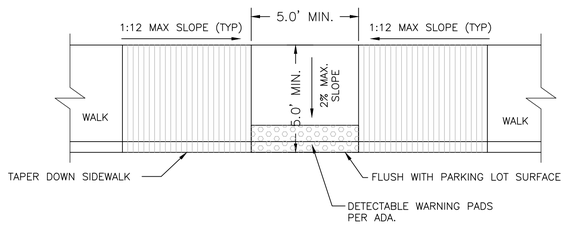

3 HANDICAP CURB ACCESS DETAILS SCALE: NTS

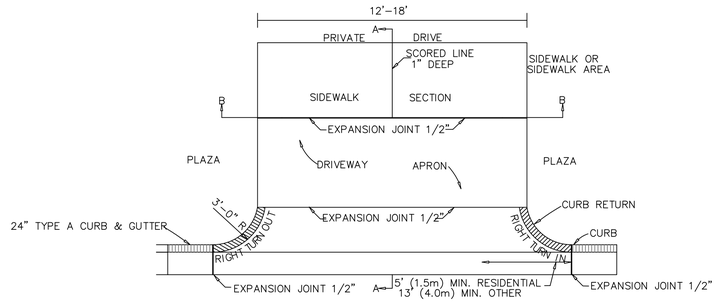

PAVEMENT PLAN

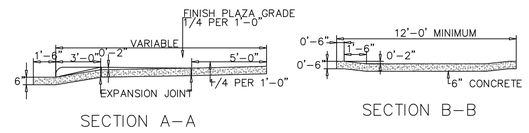

1 STANDARD DRIVEWAY DETAIL SCALE: NTS

REV.NO.	DESCRIPTIONS	DATE
	REVISIONS	

SEAL

SEAL
NORTH CAROLINA PROFESSIONAL SEAL 025503 ENGINEER RICHARD A. MOORE
5/27/2020

McKIM & CREED
243 North Front Street
Wilmington, North Carolina 28401
Phone: (910)343–1048, Fax: (910)251–8282
License: F–1222
www.mckimcreed.com

D·R·HORTON® DHI Listed NYSE
America's Builder

SIDBURY FARMS
NEW HANOVER COUNTY, NORTH CAROLINA
SITE DETAILS

DATE:	02/12/2020
MCE PROJ. #	4245–0012
DRAWN	RAS/JEB
DESIGNED	RAS/JEB
CHECKED	RAM
PROJ. MGR.	RAM

SCALE
HORIZONTAL: N/A
VERTICAL: N/A

M&C FILE NUMBER CS-501
DRAWING NUMBER 45

STATUS: TRC SUBMITTAL REVISION

SEEDBED PREPARATION:

1. CHISEL COMPACTED AREAS AND SPREAD TOPSOIL 3 INCHES DEEP OVER ADVERSE SOIL CONDITIONS, IF AVAILABLE.
2. RIP THE ENTRANCE AREA TO 6 INCHES DEPTH.
3. REMOVE ALL LOOSE ROCK, ROOTS, AND OTHER OBSTRUCTIONS LEAVING SURFACE REASONABLY SMOOTH AND UNIFORM.
4. APPLY AGRICULTURAL LIME, FERTILIZER, AND SUPERPHOSPHATE UNIFORMLY AND MIX WITH SOIL (SEE BELOW*).
5. CONTINUE TILLAGE UNTIL A WELL - PULVERIZED, FIRM, REASONABLY UNIFORM SEEDBED IS PREPARED 4 TO 6 INCHES DEEP.
6. SEED ON A FRESHLY PREPARED SEEDBED AND COVER SEED LIGHTLY WITH SEEDING EQUIPMENT OR CULTIPACK AFTER SEEDING.
7. MULCH IMMEDIATELY AFTER SEEDING AND ANCHOR MULCH.
8. INSPECT ALL SEEDED AREAS AND MAKE NECESSARY REPAIRS OR RESEEDINGS WITHIN THE PLANTING SEASON, IF POSSIBLE. IF STAND SHOULD BE OVER 60% DAMAGED, REESTABLISH FOLLOWING ORIGINAL LIME, FERTILIZER AND SEEDING RATES.
9. CONSULT CONSERVATION INSPECTOR ON MAINTENANCE TREATMENT AND FERTILIZATION AFTER PERMANENT COVER IS ESTABLISHED.
10. APPLY:
    AGRICULTURAL LIMESTONE - 2 TONS/ACRE
    FERTILIZER - 1000 LBS/ACRE (10-10-10)
    SUPERPHOSPHATE - 500 LBS/ACRE (20%)
    MULCH - 2 TONS/ACRE (SMALL GRAIN STRAW)
    ANCHOR - ASPHALT EMULSION AT 450 GAL/ACRE

TREE PROTECTION NOTES:

1. NO LAND DISTURBANCE INCLUDING TREE REMOVAL IS TO OCCUR OUTSIDE THE LIMITS OF DISTURBANCE SHOWN ON THE PLANS. [18-457(b)]
2. PROTECTIVE FENCING IS TO BE PROPERLY MAINTAINED THROUGHOUT THE DURATION OF THE PROJECT. [18-458]
3. LAND CLEARING AND CONSTRUCTION CONTRACTORS SHALL RECEIVE ADEQUATE INSTRUCTION ON TREE PROTECTION REQUIREMENTS AND METHODS. [18-457(d)]
4. ANY TREES AND/OR AREAS DESIGNATED TO BE PROTECTED MUST PROPERLY BARRICADED WITH FENCING AND PROTECTED THROUGHOUT CONSTRUCTION TO INSURE THAT NO CLEARING AND GRADING OR STAGING OF MATERIALS WILL OCCUR IN THOSE AREAS. [18-458]
5. NO EQUIPMENT IS ALLOWED ON THE SITE UNTIL ALL TREE PROTECTION FENCING AND SILT FENCING HAS BEEN INSTALLED AND APPROVED. [18-458]
6. REGULATED AND SIGNIFICANT TREES IN THE STREET YARD [18-456(c)] AND ANY TREES IN ANY REQUIRED BUFFERS [18-456(b)] ARE REQUIRED TO BE RETAINED.

8 | GENERAL NOTES | SCALE: NTS

NOTE:
THE CRITICAL ROOT ZONE (CRZ) OF A TREE IS WHERE THE MAJORITY OF A TREE'S ROOTS LAY. 85% OF MOST TREE ROOTS ARE FOUND IN THE TOP 24" OF THE SOIL AND SUPPLY THE MAJORITY OF NUTRIENTS AND WATER. GENERALLY, ROOTS SPREAD OUT 2-3X THE HEIGHT OF THE TREE.

NOTE:
CROWN OF THE TREE IS NEEDED FOR LEAF GROWTH TO PRODUCE OXYGEN, FILTER THE AIR, REDUCE WIND AND SOFTEN NOISE. DO NOT DISFIGURE CROWN WITH INTENSIVE PRUNING.

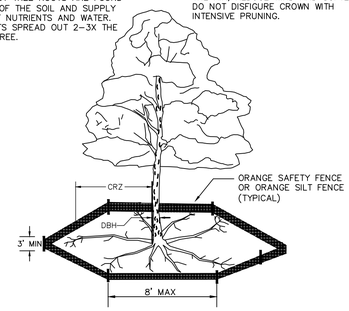

NOTES:
1. PROTECT CRITICAL ROOT ZONE (CRZ) OF TREES PRIOR TO CONSTRUCTION. CLEARLY MARK THE TREES AND ERECT A PROTECTIVE BARRIER AT THE CRZ. BARRIER SHALL BE MAINTAINED UNTIL CONSTRUCTION IS COMPLETE.
2. CRZ RADIUS IS 1 FT PER INCH OF TREE DIAMETER AT BREAST HEIGHT (DBH).
3. IF CONSTRUCTION OCCURS WITHIN THE CRZ, AT LEAST 12" OF MULCH AND/OR LOGGING MATTS SHALL BE PLACED WHERE MACHINERY MANEUVERS TO REDUCE SOIL COMPACTION IN THIS ZONE.
4. WHERE SIDEWALKS AND PATHWAYS PASS WITHIN CRZ, EXTRA CARE SHALL BE TAKEN TO AVOID DAMAGE TO THE ROOTS. ALTERNATE CONSTRUCTION METHODS, SUCH AS A REINFORCED SIDEWALK, SHALL BE IMPLEMENTED AS NECESSARY.
5. FOR ALL TREES, CUTTING OF LARGE STRUCTURAL ROOTS LOCATED NEAR THE BASE OF THE TRUNK IS PROHIBITED. DO NOT COMPACT SOIL BENEATH TREES. NO VEHICLE SHALL BE ALLOWED TO PARKUNDER TREES. NO MATERIALS OR EQUIPMENT SHALL BE STORED BENEATH TREES. DAMAGING THE BARK WITH LAWNMOWERS, CONSTRUCTION EQUIPMENT, OR ANYTHING ELSE IS PROHIBITED. CONTRACTOR SHALL REPAIR DAMAGE TO TREES.
6. FAILING TO INSTALL OR MAINTAIN PROTECTION MEASURES SHALL RESULT IN A STOP WORK ORDER AND FINE OF $500/DAY. DISTURBANCE OTHER THAN THAT ALLOWED ON THE APPROVED PLAN WILL REQUIRE OWNER TO POST A LETTER OF CREDIT FOR 3 YRS FOR TREE MITIGATION.

6 | TEMPORARY TREE PROTECTION | SCALE: NTS

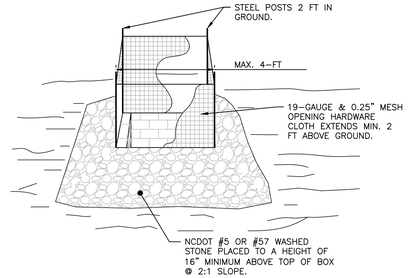

NOTES:
1. DRIVE 5-FOOT STEEL POSTS (1.25 lb/lf steel) 2 FEET INTO THE GROUND SURROUNDING THE INLET. SPACE POSTS EVENLY AROUND THE PERIMETER OF THE INLET, A MAXIMUM OF 4 FEET APART.
2. SURROUND THE POSTS WITH AT LEAST 19-GAUGE HARDWARE CLOTH WITH A 1/4-INCH MESH OPENING. SECURE THE WIRE MESH TO THE STEEL POSTS AT THE TOP, MIDDLE, AND BOTTOM FOR A MIN. 2 FEET ABOVE THE GROUND. PLACING A 2-FOOT FLAP OF THE WIRE MESH UNDER THE GRAVEL FOR ANCHORING AND REMOVAL IS RECOMMENDED.
3. UNIFORMLY GRADE A SHALLOW DEPRESSION APPROACHING THE INLET. THE TOP ELEVATION OF THE STRUCTURE MUST BE AT LEAST 12-INCHES LOWER THAN THE SURROUNDING GROUND ELEVATION DOWNSLOPE FROM THE INLET TO ENSURE THAT STORM FLOWS GET INTO THE INTENDED INLET; UNLESS OTHER SEDIMENT-CONTROL DEVICES ARE INSTALLED TO PREVENT OFF-SITE SEDIMENT-RUNOFF.

ALTERNATE MEASURE:
THE USE OF A PYRAMID SHAPED STEEL STRUCTURE OR PID CAN BE USED AS AN ALTERNATE MEASURE DEVICE. CONTACT TRIANGLE STORMWATER SOLUTIONS OR OTHER MANUFACTURERS.

4 | TEMPORARY INLET PROTECTION | SCALE: NTS

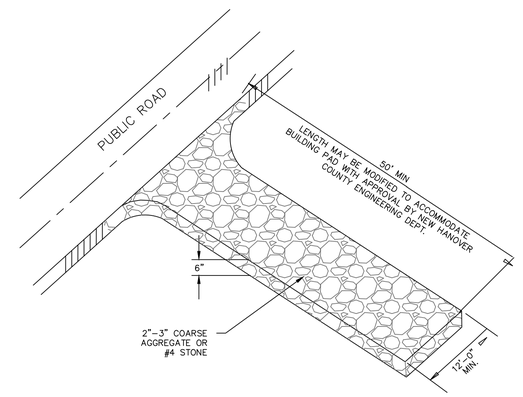

2 | TEMPORARY CONSTRUCTION ENTRANCE | SCALE: NTS

GROUND STABILIZATION CRITERIA		
SITE AREA DESCRIPTION	STABILIZATION TIMEFRAME	STABILIZATION TIMEFRAME EXCEPTIONS
PERIMETER DIKES, SWALES, DITCHES AND SLOPES	7 DAYS	NONE
HIGH QUALITY WATER ZONES	7 DAYS	NONE
SLOPES STEEPER THAN 3:1	7 DAYS	IF SLOPES ARE 10 FT OR LESS IN IN LENGTH AND ARE NOT STEEPER THAN 2:1, 14 DAYS ARE ALLOWED
SLOPES 3:1 TO 4:1	14 DAYS	– 7 DAYS FOR SLOPES GREATER THAN 50 FT IN LENGTH AND WITH SLOPES STEEPER THAN 4:1 – 7 DAYS FOR PERIMETER DIKES, SWALES, DITCHES, PERIMETER SLOPES AND HQW ZONES – 10 DAYS FOR FALLS LAKE WATERSHED
AREAS WITH SLOPES FLATTER THAN 4:1	14 DAYS	– 7 DAYS FOR PERIMETER DIKES, SWALES, DITCHES, PERIMETER SLOPES AND HQW ZONES – 10 DAYS FOR FALLS LAKE WATERSHED UNLESS THERE IS ZERO SLOPE

PERMANENT SEEDING			
GRASS TYPE	AMOUNT/ 1000 S.F.	TIME OF SEEDING	INITIAL
BERMUDA, COMMON	1–2 LBS.	APRIL – JUNE	25 LBS. 10–10–10
FESCUE, TALL (KENTUCKY 31)	5–7 LBS	JUNE – AUGUST FEB. – OCT.	25 LBS 10–10–10
SERICEA LESPEDEZA (SLOPES	1–2 LBS	MARCH – APRIL	25 LBS 10–10–10

TEMPORARY SEEDING			
GRASS TYPE	AMOUNT/ 1000 S.F.	TIME OF SEEDING	INITIAL
RYE GRAIN	1–2 LBS.	APRIL – JUNE	25 LBS. 10–10–10
BROWNTOP MILLET	1–2 LBS	JUNE – AUGUST	25 LBS 10–10–10

NOTE (G.S. 113A-57 (2))

THE ANGLE FOR GRADED SLOPES AND FILLS SHALL BE NO GREATER T HAN THE ANGLE THAT CAN BE RETAINED BY VEGETATIVE COVER OR OTHER ADEQUATE EROSION CONTROL DEVICES OR STRUCTURES. IN ANY EVENT, SLOPES LEFT EXPOSED WILL, WITHIN 21 CALENDAR DAYS OF COMPLETION OF ANY GRADING, BE PLANTED OR OTHERWISE PROVIDED WITH TEMPORARY OR PERMANENT GROUND COVER, DEVICES, OR STRUCTURES SUFFICIENT TO RESTRAIN EROSION.

7 | SEEDING AND STABILIZATION | SCALE: NTS

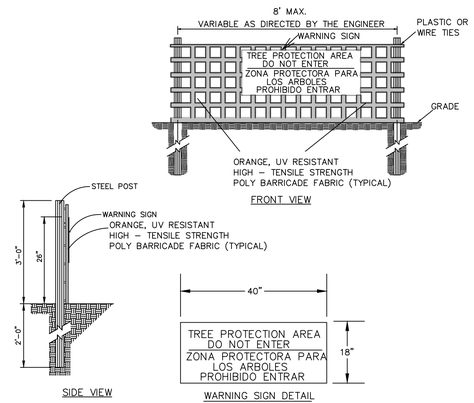

NOTES:
1. THE TREE PROTECTION FENCING SHALL NOT BE VIOLATED FOR THE ENTIRE DURATION OF THE PROJECT WITHOUT APPROVAL FROM URBAN FORESTRY STAFF.
2. WARNING SIGNS TO BE MADE OF DURABLE, WEATHERPROOF MATERIAL. LETTERS TO BE 3" HIGH, MINIMUM, CLEARLY LEGIBLE AND SPACED AS DETAILED.
3. SIGNS SHALL BE PLACED AT 50' MAXIMUM INTERVALS. PLACE A SIGN AT EACH END OF LINEAR TREE PROTECTION AND 50' ON CENTER THEREAFTER. FOR TREE PROTECTION AREAS LESS THAN 100' IN PERIMETER, PROVIDE NO LESS THAN TWO SIGNS PER PROTECTION AREA.
4. ATTACH SIGNS SECURELY TO FENCE POSTS AND FABRIC. MAINTAIN TREE PROTECTION FENCE AND SIGNS THROUGHOUT DURATION OF PROJECT.
5. TREE PROTECTION FENCING AND SIGNAGE SHALL BE REMOVED AFTER CONSTRUCTION.
6. ADDITIONAL SIGNS MAY BE REQUIRED BY CITY OF WILMINGTON, BASED ON ACTUAL FIELD CONDITIONS.

5 | TREE PROTECTION SIGNAGE | SCALE: NTS

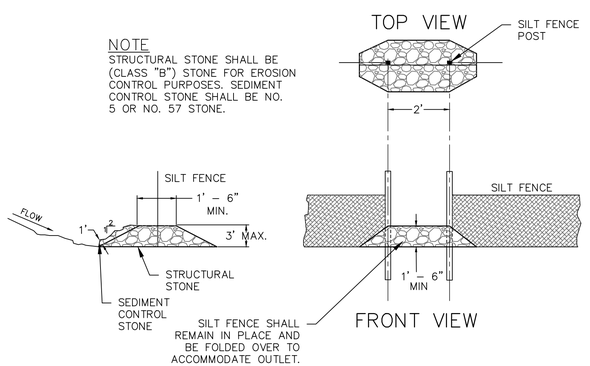

3 | SILT FENCE OUTLET | SCALE: NTS

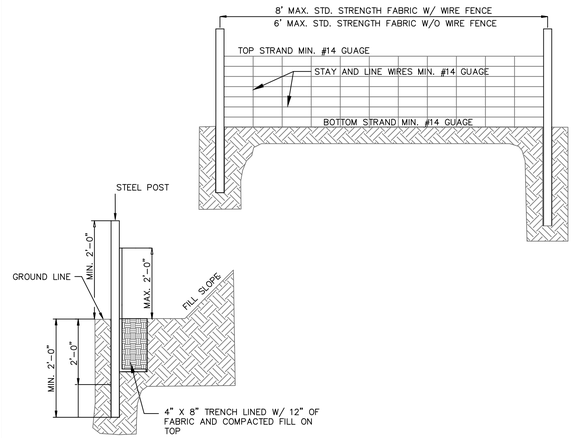

NOTES:
1. WIRE FENCE (IF USED) SHALL BE MINUMUM 14 GAUGE WITH A MAXIMUM MESH OPENING OF 6-INCHES.
2. SYNTHETIC FILTER FABRIC OF AT LEAST 95% BY WEIGHT OF POLYOLEFINS OR POLYESTER, WHICH IS CERTIFIED BY THE MANUFACTURER OR SUPPLIER AS CONFORMING TO THE REQUIREMENTS IN ASTM D 6461 AND ALSO SHOULD CONTAIN ULTRAVIOLET RAY INHIBITORS AND STABILIZERS ACCORDING TO ASTM D 4355.
3. SEE THE NC EROSION CONTROL MANUAL FOR SPECIFICATIONS INSTALLING SEDIMENT FENCE USING THE SLICING METHOD MACHINERY.

1 | TEMPORARY SILT FENCE | SCALE: NTS

REV.NO.	DESCRIPTIONS	DATE
	REVISIONS	

SEAL

SEAL
NORTH CAROLINA PROFESSIONAL ENGINEER SEAL 025503 RICHARD A. MOORE
5/27/2020

McKIM&CREED
243 North Front Street
Wilmington, North Carolina 28401
Phone: (910)343-1048, Fax: (910)251-8282
License: F-1222
www.mckimcreed.com

D·R·HORTON® DHI Listed NYSE
America's Builder

SIDBURY FARMS
NEW HANOVER COUNTY, NORTH CAROLINA
EROSION CONTROL DETAILS

DATE:	02/12/2020
MCE PROJ. #	4245-0012
DRAWN	RAS/JEB
DESIGNED	RAS/JEB
CHECKED	RAM
PROJ. MGR.	RAM

SCALE
HORIZONTAL: N/A
VERTICAL: N/A

M&C FILE NUMBER CE-501
DRAWING NUMBER 46

STATUS: TRC SUBMITTAL
REVISION

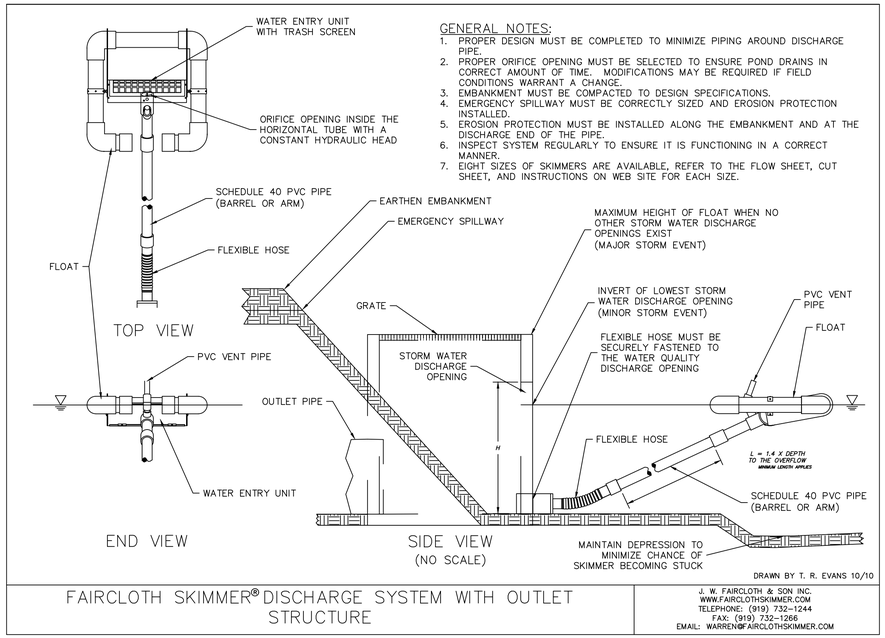

GENERAL NOTES:

1. PROPER DESIGN MUST BE COMPLETED TO MINIMIZE PIPING AROUND DISCHARGE PIPE.
2. PROPER ORIFICE OPENING MUST BE SELECTED TO ENSURE POND DRAINS IN CORRECT AMOUNT OF TIME. MODIFICATIONS MAY BE REQUIRED IF FIELD CONDITIONS WARRANT A CHANGE.
3. EMBANKMENT MUST BE COMPACTED TO DESIGN SPECIFICATIONS.
4. EMERGENCY SPILLWAY MUST BE CORRECTLY SIZED AND EROSION PROTECTION INSTALLED.
5. EROSION PROTECTION MUST BE INSTALLED ALONG THE EMBANKMENT AND AT THE DISCHARGE END OF THE PIPE.
6. INSPECT SYSTEM REGULARLY TO ENSURE IT IS FUNCTIONING IN A CORRECT MANNER.
7. EIGHT SIZES OF SKIMMERS ARE AVAILABLE, REFER TO THE FLOW SHEET, CUT SHEET, AND INSTRUCTIONS ON WEB SITE FOR EACH SIZE.

FAIRCLOTH SKIMMER® DISCHARGE SYSTEM WITH OUTLET STRUCTURE

J. W. FAIRCLOTH & SON INC.
WWW.FAIRCLOTHSKIMMER.COM
TELEPHONE: (919) 732-1244
FAX: (919) 732-1266
EMAIL: WARREN@FAIRCLOTHSKIMMER.COM

5 FAIRCLOTH SKIMMER — SCALE: NTS

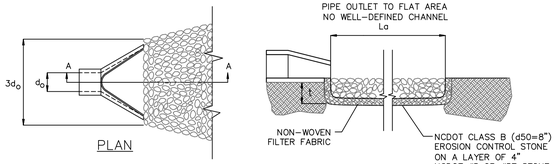

NOTES:

1. IN A WELL-DEFINED CHANNEL EXTEND THE APRON UP THE CHANNEL BANKS TO AN ELEVATION OF 6" ABOVE THE MAXIMUM TAILWATER DEPTH OR TO THE TOP OF THE BANK, WHICHEVER IS LESS.

3 RIPRAP OUTLET PROTECTION — SCALE: NTS

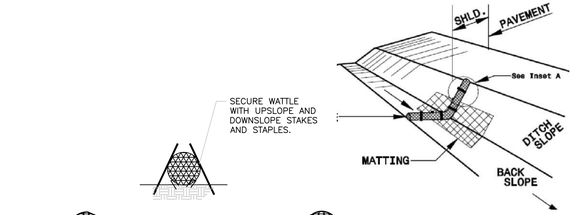

NOTES:

1. USE MINIMUM 18" DIA. EXCELSIOR WATTLE.
2. USE 2"x2" WOODEN STAKES 2-FT IN LENGTH ON THE UPSLOPE AND DOWNSLOPE AT AN ANGLE TO WEDGE THE WATTLE TO THE BOTTOM OF THE SWALE.
3. STAPLE EVERY 1 LF ON BOTH SIDES OF THE WATTLE TO SECURE IT TO THE BOTTOM OF THE SWALE.

2 CHECK DAM / WATTLES — SCALE: NTS

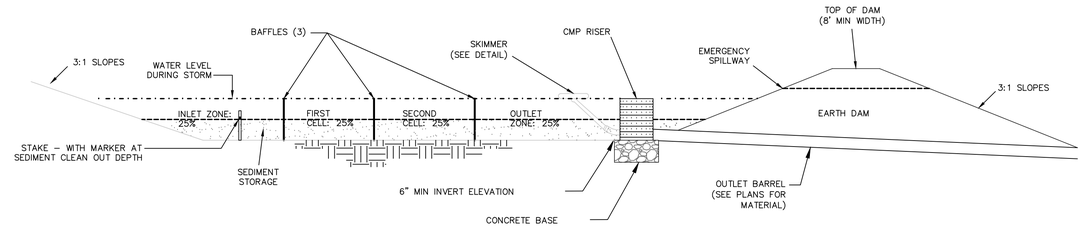

NOTES

1. BAFFLE MATERIAL SHALL BE MATERIALS SUCH AS 700 G/M COIR EROSION BLANKET, COIR MESH, OR TREE PROTECTION FENCE FOLDED OVER TO REDUCE PORE SIZE.
2. THE BAFFLE MATERIAL NEEDS TO BE SECURED AT THE BOTTOM AND SIDES USING STAPLES OR BY TRENCHING AS FOR SILT FENCE.

NOTES (CONT'D)

3. LOCATE THE EMERGENCY SPILLWAY ON NATURAL SOILS. AVOID PLACING IT THROUGH FILL MATERIAL WHEREVER POSSIBLE.
4. ALL RUNOFF MUST DISCHARGE TO THE INLET SIDE OF THE BASIN. DISCHARGE RUNOFF INTO THE BASIN IN A MANNER THAT MINIMIZES EROSION.

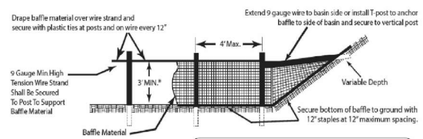

* If the temporary sediment basin will be converted to a permanent stormwater basin of greater depth, the baffle height should be based on the pool depth during use as a temporary sediment basin.

Note: Install three (3) coir fiber baffles in basins at drainage outlets with a spacing of 1/4 the basin length. Two (2) coir fiber baffles can be installed in the basins less than 20 ft. in length with a spacing of 1/3 the basin length.

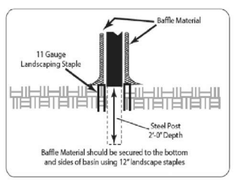

4 SKIMMER SEDIMENT BASIN — SCALE: NTS

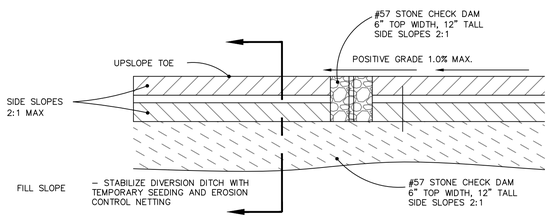

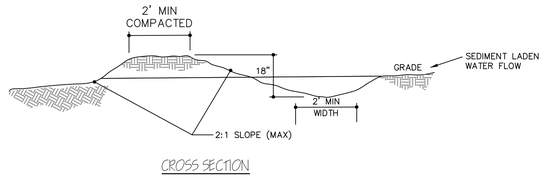

1 TEMPORARY DIVERSION DTICH — SCALE: NTS

REV.NO.	DESCRIPTIONS	DATE
	REVISIONS	

SEAL

SEAL
NORTH CAROLINA PROFESSIONAL ENGINEER SEAL 025503 RICHARD A. MOORE
5/27/2020

McKIM&CREED
243 North Front Street
Wilmington, North Carolina 28401
Phone: (910)343-1048, Fax: (910)251-8282
License: F-1222
www.mckimcreed.com

D·R·HORTON® DHI Listed NYSE
America's Builder

SIDBURY FARMS

NEW HANOVER COUNTY, NORTH CAROLINA

EROSION CONTROL DETAILS

DATE:	02/12/2020
MCE PROJ. #	4245-0012
DRAWN	RAS/JEB
DESIGNED	RAS/JEB
CHECKED	RAM
PROJ. MGR.	RAM

STATUS: TRC SUBMITTAL — REVISION

SCALE: HORIZONTAL: N/A VERTICAL: N/A

M&C FILE NUMBER: CE-502

DRAWING NUMBER: 47

GROUND STABILIZATION AND MATERIALS HANDLING PRACTICES FOR COMPLIANCE WITH THE NCG01 CONSTRUCTION GENERAL PERMIT

Implementing the details and specifications on this plan sheet will result in the construction activity being considered compliant with the Ground Stabilization and Materials Handling sections of the NCG01 Construction General Permit (Sections E and F, respectively). The permittee shall comply with the Erosion and Sediment Control plan approved by the delegated authority having jurisdiction. All details and specifications shown on this sheet may not apply depending on site conditions and the delegated authority having jurisdiction.

SECTION E: GROUND STABILIZATION

Required Ground Stabilization Timeframes

Site Area Description	Stabilize within this many calendar days after ceasing land disturbance	Timeframe variations
(a) Perimeter dikes, swales, ditches, and perimeter slopes	7	None
(b) High Quality Water (HQW) Zones	7	None
(c) Slopes steeper than 3:1	7	If slopes are 10' or less in length and are not steeper than 2:1, 14 days are allowed
(d) Slopes 3:1 to 4:1	14	-7 days for slopes greater than 50' in length and with slopes steeper than 4:1 -7 days for perimeter dikes, swales, ditches, perimeter slopes and HQW Zones -10 days for Falls Lake Watershed
(e) Areas with slopes flatter than 4:1	14	-7 days for perimeter dikes, swales, ditches, perimeter slopes and HQW Zones -10 days for Falls Lake Watershed unless there is zero slope

Note: After the permanent cessation of construction activities, any areas with temporary ground stabilization shall be converted to permanent ground stabilization as soon as practicable but in no case longer than 90 calendar days after the last land disturbing activity. Temporary ground stabilization shall be maintained in a manner to render the surface stable against accelerated erosion until permanent ground stabilization is achieved.

GROUND STABILIZATION SPECIFICATION

Stabilize the ground sufficiently so that rain will not dislodge the soil. Use one of the techniques in the table below:

Temporary Stabilization	Permanent Stabilization
• Temporary grass seed covered with straw or other mulches and tackifiers • Hydroseeding • Rolled erosion control products with or without temporary grass seed • Appropriately applied straw or other mulch • Plastic sheeting	• Permanent grass seed covered with straw or other mulches and tackifiers • Geotextile fabrics such as permanent soil reinforcement matting • Hydroseeding • Shrubs or other permanent plantings covered with mulch • Uniform and evenly distributed ground cover sufficient to restrain erosion • Structural methods such as concrete, asphalt or retaining walls • Rolled erosion control products with grass seed

POLYACRYLAMIDES (PAMS) AND FLOCCULANTS

1. Select flocculants that are appropriate for the soils being exposed during construction, selecting from the *NC DWR List of Approved PAMS/Flocculants*.
2. Apply flocculants at or before the inlets to Erosion and Sediment Control Measures.
3. Apply flocculants at the concentrations specified in the *NC DWR List of Approved PAMS/Flocculants* and in accordance with the manufacturer's instructions.
4. Provide ponding area for containment of treated Stormwater before discharging offsite.
5. Store flocculants in leak-proof containers that are kept under storm-resistant cover or surrounded by secondary containment structures.

EQUIPMENT AND VEHICLE MAINTENANCE

1. Maintain vehicles and equipment to prevent discharge of fluids.
2. Provide drip pans under any stored equipment.
3. Identify leaks and repair as soon as feasible, or remove leaking equipment from the project.
4. Collect all spent fluids, store in separate containers and properly dispose as hazardous waste (recycle when possible).
5. Remove leaking vehicles and construction equipment from service until the problem has been corrected.
6. Bring used fuels, lubricants, coolants, hydraulic fluids and other petroleum products to a recycling or disposal center that handles these materials.

LITTER, BUILDING MATERIAL AND LAND CLEARING WASTE

1. Never bury or burn waste. Place litter and debris in approved waste containers.
2. Provide a sufficient number and size of waste containers (e.g dumpster, trash receptacle) on site to contain construction and domestic wastes.
3. Locate waste containers at least 50 feet away from storm drain inlets and surface waters unless no other alternatives are reasonably available.
4. Locate waste containers on areas that do not receive substantial amounts of runoff from upland areas and does not drain directly to a storm drain, stream or wetland.
5. Cover waste containers at the end of each workday and before storm events or provide secondary containment. Repair or replace damaged waste containers.
6. Anchor all lightweight items in waste containers during times of high winds.
7. Empty waste containers as needed to prevent overflow. Clean up immediately if containers overflow.
8. Dispose waste off-site at an approved disposal facility.
9. On business days, clean up and dispose of waste in designated waste containers.

PAINT AND OTHER LIQUID WASTE

1. Do not dump paint and other liquid waste into storm drains, streams or wetlands.
2. Locate paint washouts at least 50 feet away from storm drain inlets and surface waters unless no other alternatives are reasonably available.
3. Contain liquid wastes in a controlled area.
4. Containment must be labeled, sized and placed appropriately for the needs of site.
5. Prevent the discharge of soaps, solvents, detergents and other liquid wastes from construction sites.

PORTABLE TOILETS

1. Install portable toilets on level ground, at least 50 feet away from storm drains, streams or wetlands unless there is no alternative reasonably available. If 50 foot offset is not attainable, provide relocation of portable toilet behind silt fence or place on a gravel pad and surround with sand bags.
2. Provide staking or anchoring of portable toilets during periods of high winds or in high foot traffic areas.
3. Monitor portable toilets for leaking and properly dispose of any leaked material. Utilize a licensed sanitary waste hauler to remove leaking portable toilets and replace with properly operating unit.

EARTHEN STOCKPILE MANAGEMENT

1. Show stockpile locations on plans. Locate earthen-material stockpile areas at least 50 feet away from storm drain inlets, sediment basins, perimeter sediment controls and surface waters unless it can be shown no other alternatives are reasonably available.
2. Protect stockpile with silt fence installed along toe of slope with a minimum offset of five feet from the toe of stockpile.
3. Provide stable stone access point when feasible.
4. Stabilize stockpile within the timeframes provided on this sheet and in accordance with the approved plan and any additional requirements. Soil stabilization is defined as vegetative, physical or chemical coverage techniques that will restrain accelerated erosion on disturbed soils for temporary or permanent control needs.

NORTH CAROLINA *Environmental Quality*

ONSITE CONCRETE WASHOUT STRUCTURE WITH LINER

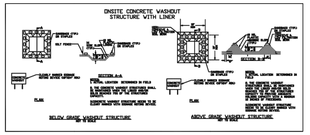

CONCRETE WASHOUTS

1. Do not discharge concrete or cement slurry from the site.
2. Dispose of, or recycle settled, hardened concrete residue in accordance with local and state solid waste regulations and at an approved facility.
3. Manage washout from mortar mixers in accordance with the above item and in addition place the mixer and associated materials on impervious barrier and within lot perimeter silt fence.
4. Install temporary concrete washouts per local requirements, where applicable. If an alternate method or product is to be used, contact your approval authority for review and approval. If local standard details are not available, use one of the two types of temporary concrete washouts provided on this detail.
5. Do not use concrete washouts for dewatering or storing defective curb or sidewalk sections. Stormwater accumulated within the washout may not be pumped into or discharged to the storm drain system or receiving surface waters. Liquid waste must be pumped out and removed from project.
6. Locate washouts at least 50 feet from storm drain inlets and surface waters unless it can be shown that no other alternatives are reasonably available. At a minimum, install protection of storm drain inlet(s) closest to the washout which could receive spills or overflow.
7. Locate washouts in an easily accessible area, on level ground and install a stone entrance pad in front of the washout. Additional controls may be required by the approving authority.
8. Install at least one sign directing concrete trucks to the washout within the project limits. Post signage on the washout itself to identify this location.
9. Remove leavings from the washout when at approximately 75% capacity to limit overflow events. Replace the tarp, sand bags or other temporary structural components when no longer functional. When utilizing alternative or proprietary products, follow manufacturer's instructions.
10. At the completion of the concrete work, remove remaining leavings and dispose of in an approved disposal facility. Fill pit, if applicable, and stabilize any disturbance caused by removal of washout.

HERBICIDES, PESTICIDES AND RODENTICIDES

1. Store and apply herbicides, pesticides and rodenticides in accordance with label restrictions.
2. Store herbicides, pesticides and rodenticides in their original containers with the label, which lists directions for use, ingredients and first aid steps in case of accidental poisoning.
3. Do not store herbicides, pesticides and rodenticides in areas where flooding is possible or where they may spill or leak into wells, stormwater drains, ground water or surface water. If a spill occurs, clean area immediately.
4. Do not stockpile these materials onsite.

HAZARDOUS AND TOXIC WASTE

1. Create designated hazardous waste collection areas on-site.
2. Place hazardous waste containers under cover or in secondary containment.
3. Do not store hazardous chemicals, drums or bagged materials directly on the ground.

NCG01 GROUND STABILIZATION AND MATERIALS HANDLING

EFFECTIVE: 04/01/19

2 | NCG01 GROUND STABLIZATION AND MATERIALS HANDLING | SCALE: NTS

PART III
SELF-INSPECTION, RECORDKEEPING AND REPORTING

SECTION A: SELF-INSPECTION

Self-inspections are required during normal business hours in accordance with the table below. When adverse weather or site conditions would cause the safety of the inspection personnel to be in jeopardy, the inspection may be delayed until the next business day on which it is safe to perform the inspection. In addition, when a storm event of equal to or greater than 1.0 inch occurs outside of normal business hours, the self-inspection shall be performed upon the commencement of the next business day. Any time when inspections were delayed shall be noted in the Inspection Record.

Inspect	Frequency (during normal business hours)	Inspection records must include:
(1) Rain gauge maintained in good working order	Daily	Daily rainfall amounts. If no daily rain gauge observations are made during weekend or holiday periods, and no individual-day rainfall information is available, record the cumulative rain measurement for those un-attended days (and this will determine if a site inspection is needed). Days on which no rainfall occurred shall be recorded as "zero." The permittee may use another rain-monitoring device approved by the Division.
(2) E&SC Measures	At least once per 7 calendar days and within 24 hours of a rain event ≥ 1.0 inch in 24 hours	1. Identification of the measures inspected, 2. Date and time of the inspection, 3. Name of the person performing the inspection, 4. Indication of whether the measures were operating properly, 5. Description of maintenance needs for the measure, 6. Description, evidence, and date of corrective actions taken.
(3) Stormwater discharge outfalls (SDOs)	At least once per 7 calendar days and within 24 hours of a rain event ≥ 1.0 inch in 24 hours	1. Identification of the discharge outfalls inspected, 2. Date and time of the inspection, 3. Name of the person performing the inspection, 4. Evidence of indicators of stormwater pollution such as oil sheen, floating or suspended solids or discoloration, 5. Indication of visible sediment leaving the site, 6. Description, evidence, and date of corrective actions taken.
(4) Parameter of site	At least once per 7 calendar days and within 24 hours of a rain event ≥ 1.0 inch in 24 hours	If visible sedimentation is found outside site limits, then a record of the following shall be made: 1. Actions taken to clean up or stabilize the sediment that has left the site limits, 2. Description, evidence, and date of corrective actions taken, and 3. An explanation as to the actions taken to control future releases.
(5) Streams or wetlands onsite or offsite (where accessible)	At least once per 7 calendar days and within 24 hours of a rain event ≥ 1.0 inch in 24 hours	If the stream or wetland has increased visible sedimentation or a stream has visible increased turbidity from the construction activity, then a record of the following shall be made: 1. Description, evidence and date of corrective actions taken, and 2. Records of the required reports to the appropriate Division Regional Office per Part B, Section C, Item (2)(a) of this permit of this permit.
(5) Ground stabilization measures	After each phase of grading	1. The phase of grading (installation of perimeter E&SC measures, clearing and grubbing, installation of storm drainage facilities, completion of all land-disturbing activity, construction or redevelopment, permanent ground cover); and 2. Documentation that the required ground stabilization measures have been provided within the required timeframe or an assurance that they will be provided as soon as possible.

NOTE: The rain inspection resets the required 7 calendar day inspection requirement.

PART III
SELF-INSPECTION, RECORDKEEPING AND REPORTING

SECTION B: RECORDKEEPING

1. E&SC Plan Documentation

The approved E&SC plan as well as any approved deviation shall be kept on the site. The approved E&SC plan must be kept up-to-date throughout the coverage under this permit. The following items pertaining to the E&SC plan shall be documented in the manner described:

Item to Document	Documentation Requirements
(a) Each E&SC Measure has been installed and does not significantly deviate from the locations, dimensions and relative elevations shown on the approved E&SC Plan.	Initial and date each E&SC Measure on a copy of the approved E&SC Plan or complete, date and sign an inspection report that lists each E&SC Measure shown on the approved E&SC Plan. This documentation is required upon the initial installation of the E&SC Measures or if the E&SC Measures are modified after initial installation.
(b) A phase of grading has been completed.	Initial and date a copy of the approved E&SC Plan or complete, date and sign an inspection report to indicate completion of the construction phase.
(c) Ground cover is located and installed in accordance with the approved E&SC Plan.	Initial and date a copy of the approved E&SC Plan or complete, date and sign an inspection report to indicate compliance with approved ground cover specifications.
(d) The maintenance and repair requirements for all E&SC Measures have been performed.	Complete, date and sign an inspection report.
(e) Corrective actions have been taken to E&SC Measures.	Initial and date a copy of the approved E&SC Plan or complete, date and sign an inspection report to indicate the completion of the corrective action.

2. Additional Documentation

In addition to the E&SC Plan documents above, the following items shall be kept on the site

and available for agency inspectors at all times during normal business hours, unless the Division provides a site-specific exemption based on unique site conditions that make this requirement not practical:

(a) This general permit as well as the certificate of coverage, after it is received.

(b) Records of inspections made during the previous 30 days. The permittee shall record the required observations on the Inspection Record Form provided by the Division or a similar inspection form that includes all the required elements. Use of electronically-available records in lieu of the required paper copies will be allowed if shown to provide equal access and utility as the hard-copy records.

(c) All data used to complete the Notice of Intent and older inspection records shall be maintained for a period of three years after project completion and made available upon request. [40 CFR 122.41]

PART III
SELF-INSPECTION, RECORDKEEPING AND REPORTING

SECTION C: REPORTING

1. Occurrences that must be reported

Permittees shall report the following occurrences:

(a) Visible sediment deposition in a stream or wetland.

(b) Oil spills if:
- They are 25 gallons or more,
- They are less than 25 gallons but cannot be cleaned up within 24 hours,
- They cause sheen on surface waters (regardless of volume), or
- They are within 100 feet of surface waters (regardless of volume).

(a) Releases of hazardous substances in excess of reportable quantities under Section 311 of the Clean Water Act (Ref: 40 CFR 110.3 and 40 CFR 117.3) or Section 102 of CERCLA (Ref: 40 CFR 302.4) or G.S. 143-215.85.

(b) Anticipated bypasses and unanticipated bypasses.

(c) Noncompliance with the conditions of this permit that may endanger health or the environment.

2. Reporting Timeframes and Other Requirements

After a permittee becomes aware of an occurrence that must be reported, he shall contact the appropriate Division regional office within the timeframes and in accordance with the other requirements listed below. Occurrences outside normal business hours may also be reported to the Division's Emergency Response personnel at (800) 662-7956, (800) 858-0368 or (919) 733-3300.

Occurrence	Reporting Timeframes (After Discovery) and Other Requirements
(a) Visible sediment deposition in a stream or wetland	• ***Within 24 hours***, an oral or electronic notification. • ***Within 7 calendar days***, a report that contains a description of the sediment and actions taken to address the cause of the deposition. Division staff may waive the requirement for a written report on a case-by-case basis. • If the stream is named on the NC 303(d) list as impaired for sediment-related causes, the permittee may be required to perform additional monitoring, inspections or apply more stringent practices if staff determine that additional requirements are needed to assure compliance with the federal or state impaired-waters conditions.
(b) Oil spills and release of hazardous substances per Item 1(b)-(c) above	• ***Within 24 hours***, an oral or electronic notification. The notification shall include information about the date, time, nature, volume and location of the spill or release.
(c) Anticipated bypasses [40 CFR 122.41(m)(3)]	• ***A report at least ten days before the date of the bypass, if possible.*** The report shall include an evaluation of the anticipated quality and effect of the bypass.
(d) Unanticipated bypasses [40 CFR 122.41(m)(3)]	• ***Within 24 hours***, an oral or electronic notification. • ***Within 7 calendar days***, a report that includes an evaluation of the quality and effect of the bypass.
(e) Noncompliance with the conditions of this permit that may endanger health or the environment[40 CFR 122.41(l)(7)]	• ***Within 24 hours***, an oral or electronic notification. • ***Within 7 calendar days***, a report that contains a description of the noncompliance, and its causes; the period of noncompliance, including exact dates and times, and if the noncompliance has not been corrected, the anticipated time noncompliance is expected to continue; and steps taken or planned to reduce, eliminate, and prevent reoccurrence of the noncompliance. [40 CFR 122.41(l)(6). • Division staff may waive the requirement for a written report on a case-by-case basis.

NORTH CAROLINA *Environmental Quality*

NCG01 SELF-INSPECTION, RECORDKEEPING AND REPORTING

EFFECTIVE: 04/01/19

1 | NCG01 SELF-INSPECTION, RECORDKEEPING AND REPORTING | SCALE: NTS

REV.NO.	DESCRIPTIONS	DATE
	REVISIONS	

SEAL

SEAL
NORTH CAROLINA PROFESSIONAL SEAL 025503 ENGINEER RICHARD A. MOORE
5/27/2020

McKIM&CREED
243 North Front Street
Wilmington, North Carolina 28401
Phone: (910)343-1048, Fax: (910)251-8282
License: F-1222
www.mckimcreed.com

D·R·HORTON® DHI Listed NYSE
America's Builder

SIDBURY FARMS

NEW HANOVER COUNTY, NORTH CAROLINA

EROSION CONTROL DETAILS

DATE:	02/12/2020
MCE PROJ. #	4245-0012
DRAWN	RAS/JEB
DESIGNED	RAS/JEB
CHECKED	RAM
PROJ. MGR.	RAM

SCALE
HORIZONTAL: N/A
VERTICAL: N/A

M&C FILE NUMBER CE-503
DRAWING NUMBER 48

STATUS: TRC SUBMITTAL
REVISION

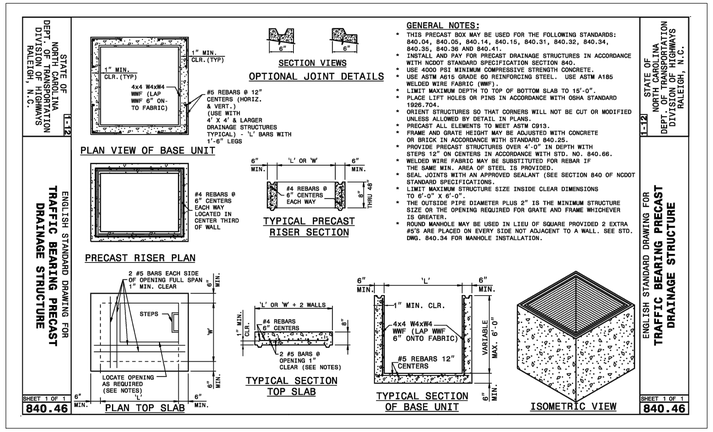

9 TRAFFIC BEARING PRECAST DRAINAGE STRUCTURE SCALE: NTS

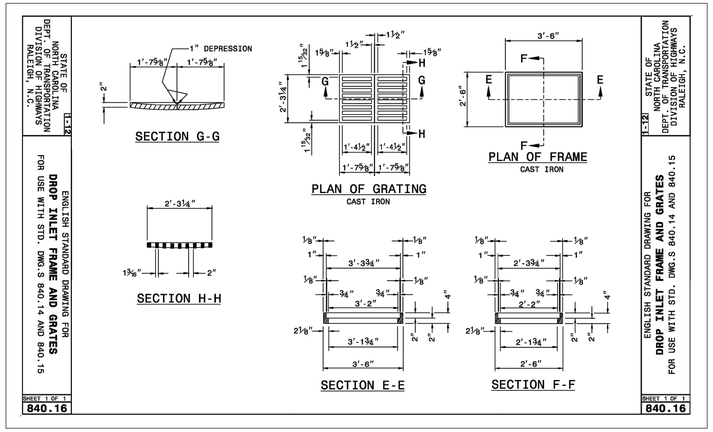

6 DROP INLET FRAME AND GRATES SCALE: NTS

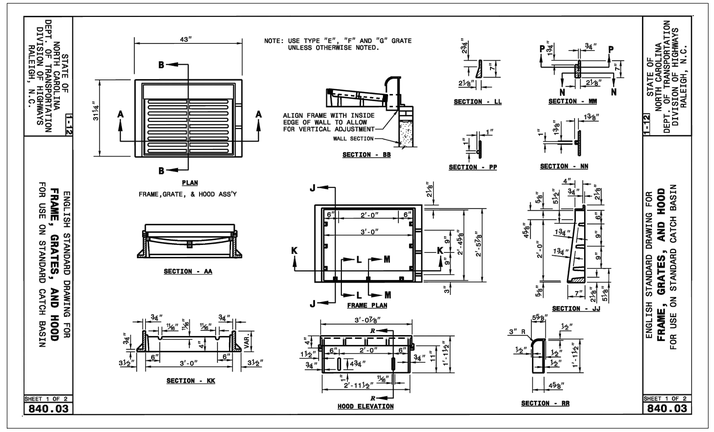

3 FRAME, GRATES AND HOOD FOR USE ON STANDARD CATCH BASIN (SHEET 1 OF 2) SCALE: NTS

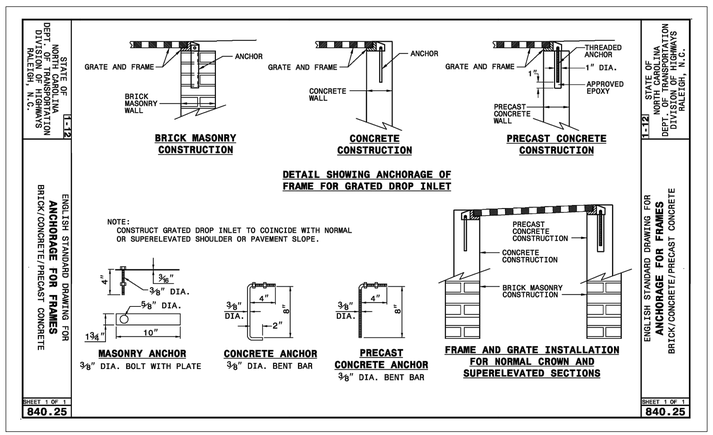

8 ANCHORAGE FOR FRAMES SCALE: NTS

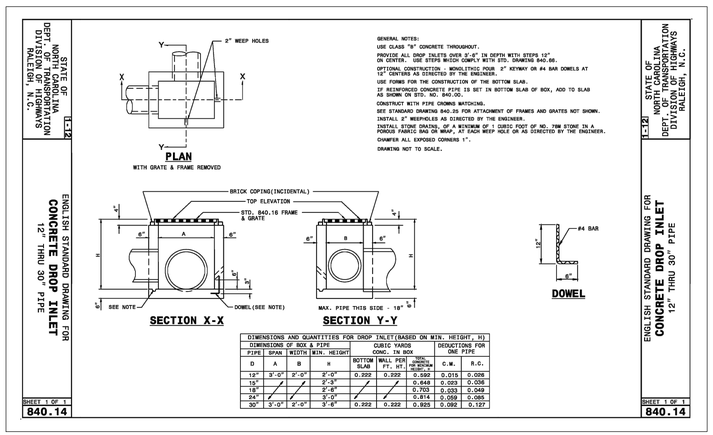

5 CONCRETE DROP INLET 12" THRU 30" PIPE SCALE: NTS

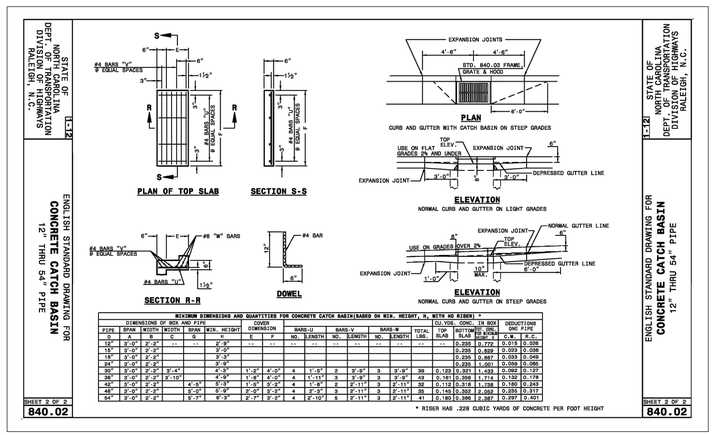

2 CONCRETE CATCH BASIN 12" THRU 54" PIPE (SHEET 2 OF 2) SCALE: NTS

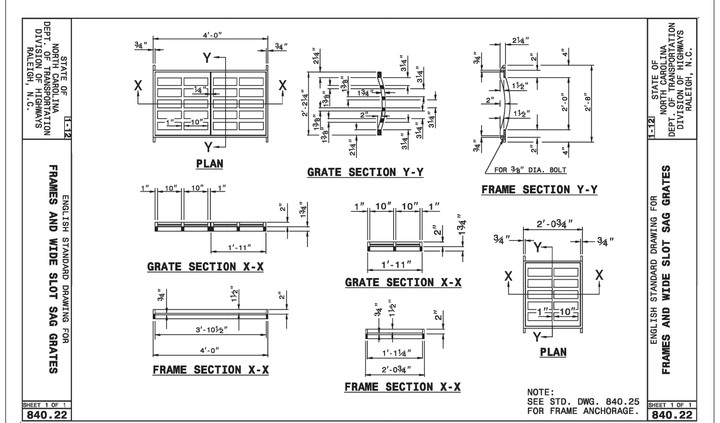

7 FRAMES AND WIDE SLOT SAG GRATES SCALE: NTS

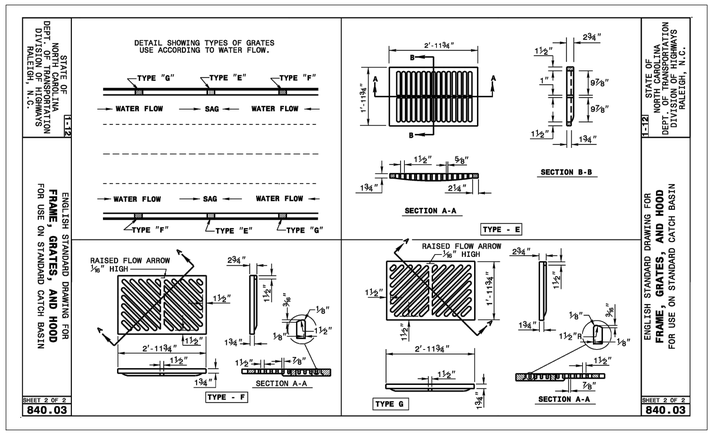

4 FRAME, GRATES, AND HOOD FOR USE ON STANDARD CATCH BASIN (SHEET 2 OF 2) SCALE: NTS

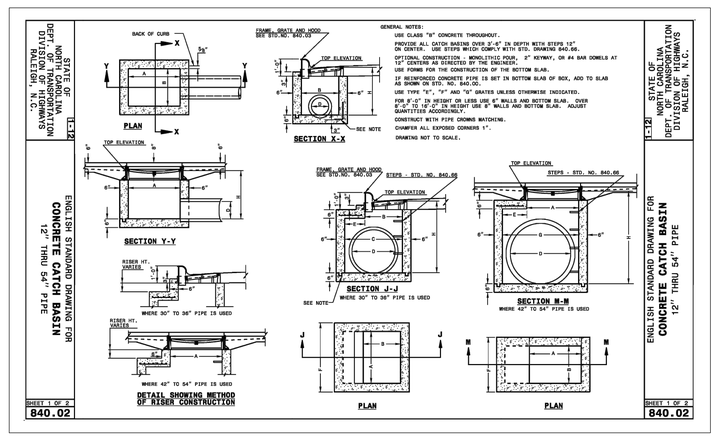

1 CONCRETE CATCH BASIN 12" THRU 54" PIPE (SHEET 1 OF 1) SCALE: NTS

REV.NO.	DESCRIPTIONS	DATE
	REVISIONS	

SEAL

SEAL
NORTH CAROLINA PROFESSIONAL ENGINEER SEAL 025503 ENGINEER RICHARD A. MOORE
5/27/2020

McKIM&CREED
243 North Front Street
Wilmington, North Carolina 28401
Phone: (910)343-1048, Fax: (910)251-8282
License: F-1222
www.mckimcreed.com

D·R·HORTON® DHI Listed NYSE
America's Builder

SIDBURY FARMS
NEW HANOVER COUNTY, NORTH CAROLINA
STORM DRAINAGE DETAILS

DATE:	02/12/2020
MCE PROJ. #	4245-0012
DRAWN	RAS/JEB
DESIGNED	RAS/JEB
CHECKED	RAM
PROJ. MGR.	RAM

SCALE
HORIZONTAL: N/A
VERTICAL: N/A

M&C FILE NUMBER CG-501
DRAWING NUMBER 49

STATUS: TRC SUBMITTAL REVISION

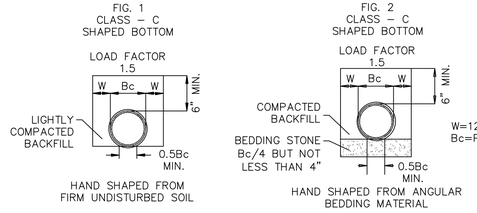

- EXCAVATION FOR STORM DRAINAGE PIPE SHALL BE TO THE LINES AND GRADES AS SHOWN ON THE PLANS.
- THE BEDDING SHALL BE SHAPED IN ACCORDANCE WITH CLASS "C" BEDDING AS SHOWN ON CITY STANDARD DETAIL SD 2-17.
- THE BEDDING SHALL PROVIDE A FIRM FOUNDATION OF UNIFORM DENSITY ALONG THE ENTIRE LENGTH OF PIPE. RECESSES SHALL BE MADE TO ACCOMMODATE BELLS AND JOINTS.
- WHERE UNSTABLE SOILS ARE ENCOUNTERED AS DETERMINED BY GEOTECHNICAL ENGINEER, A MINIMUM 4-INCH THICK BEDDING OF STONE SHALL BE PLACED, SEE FIGURE 2, SD 2-17.
- THE STONE SHALL BE UNIFORMLY GRADED FROM 3/4 INCH TO NO. 4 IN ACCORDANCE WITH ASTM C-33. CARE SHALL BE TAKEN TO PREVENT UNDERCUTTING IN SUITABLE SOIL.
- AREAS UNDERCUT SHALL BE FILLED WITH SUITABLE SOIL AND COMPACTED TO 95% OF MAXIMUM DENSITY AT OPTIMUM MOISTURE CONTENT AS DETERMINED BY ASTM D 1557 STANDARD TEST METHOD.

9 GUIDELINES FOR BEDDING STORM SEWER CLASS C — SCALE: NTS

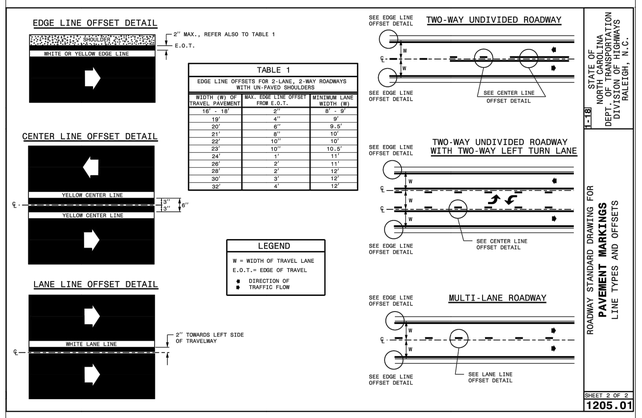

ROADWAY STANDARD DRAWING FOR **PAVEMENT MARKINGS** LINE TYPES AND OFFSETS

STATE OF NORTH CAROLINA DEPT. OF TRANSPORTATION DIVISION OF HIGHWAYS RALEIGH, N.C.

SHEET 2 OF 2 **1205.01**

6 PAVEMENT MARKINGS, LINE TYPES AND OFFSETS (SHEET 2 OF 2) — SCALE: NTS

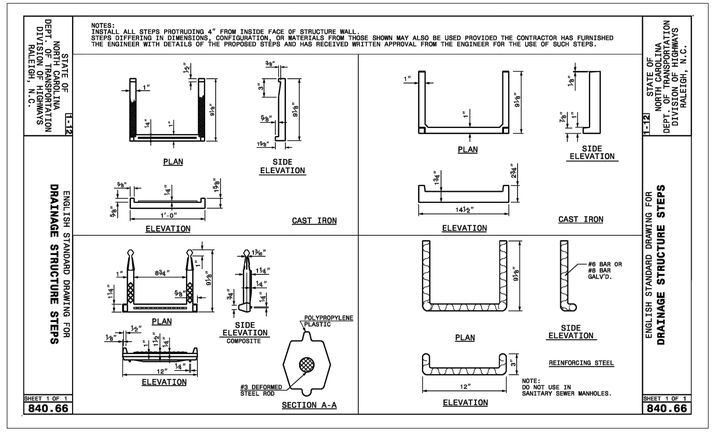

ENGLISH STANDARD DRAWING FOR **DRAINAGE STRUCTURE STEPS**

STATE OF NORTH CAROLINA DEPT. OF TRANSPORTATION DIVISION OF HIGHWAYS RALEIGH, N.C.

SHEET 1 OF 1 **840.66**

3 DRAINAGE STRUCTURE STEPS — SCALE: NTS

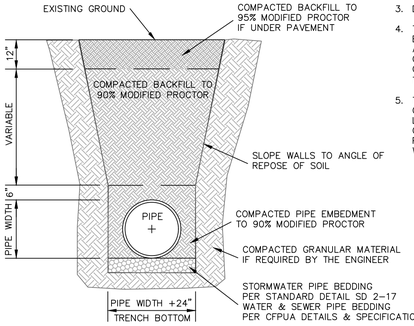

STORM DRAINAGE NOTES:

1. ALL PIPE BEDDING SHALL BE CLASS "C" UNLESS OTHERWISE DIRECTED BY THE ENGINEER.
2. ALL STORM DRAINAGE PIPES SHALL BE RCP CLASS III UNLESS OTHERWISE NOTED ON THE PLANS.
3. DO NOT PLANT TREES WITHIN UTILITY AND DRAINAGE EASEMENTS.
4. THE ENGINEER AND THE CONTRACTOR SHALL INSPECT ALL EXISTING PIPES USED IN THE FINAL DRAINAGE SYSTEM AND AGREE ON THE CONDITION OF THE PIPES PRIOR TO CONSTRUCTION. IF DAMAGE OCCURS TO THESE PIPES DURING CONSTRUCTION, THE CONTRACTOR SHALL BE RESPONSIBLE FOR THE REPAIR OR REPLACEMENT OF THE PIPE(S).
5. THE CONTRACTOR SHALL CONTACT ONECALL BEFORE COMMENCING ANY WORK. THE CONTRACTOR SHALL VERIFY THE LOCATION OF ALL UNDERGROUND UTILITIES WHETHER INDICATED ON THE DRAWINGS OR NOT. THE CONTRACTOR WILL ASSURE THE PRESENCE ONSITE OF A REPRESENTATIVE OF THE GAS COMPANY WHEN WORKING IN THE VICINITY OF ANY GAS MAINS.

8 STANDARD PIPE TRENCH DETAIL — SCALE: NTS

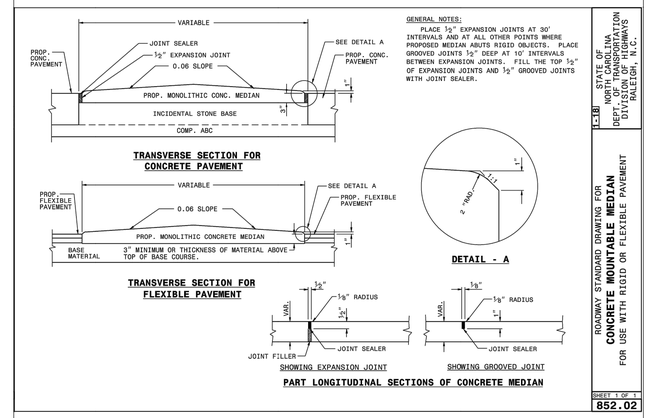

ROADWAY STANDARD DRAWING FOR **CONCRETE MOUNTABLE MEDIAN** FOR USE WITH RIGID OR FLEXIBLE PAVEMENT

STATE OF NORTH CAROLINA DEPT. OF TRANSPORTATION DIVISION OF HIGHWAYS RALEIGH, N.C.

SHEET 1 OF 1 **852.02**

5 CONCRETE MOUNTABLE MEDIAN — SCALE: NTS

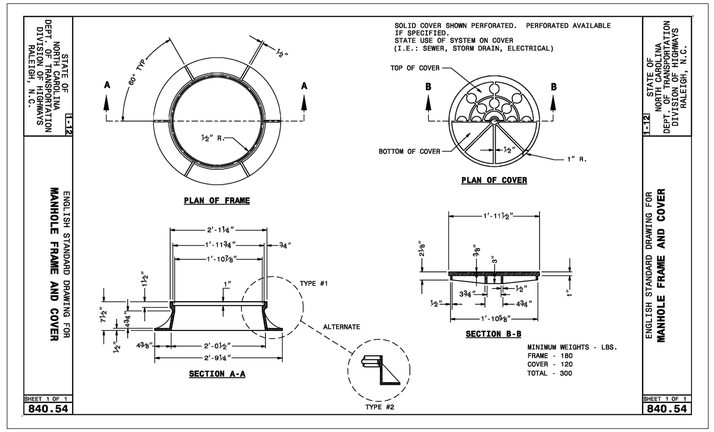

ENGLISH STANDARD DRAWING FOR **MANHOLE FRAME AND COVER**

STATE OF NORTH CAROLINA DEPT. OF TRANSPORTATION DIVISION OF HIGHWAYS RALEIGH, N.C.

SHEET 1 OF 1 **840.54**

2 MANHOLE FRAME AND COVER — SCALE: NTS

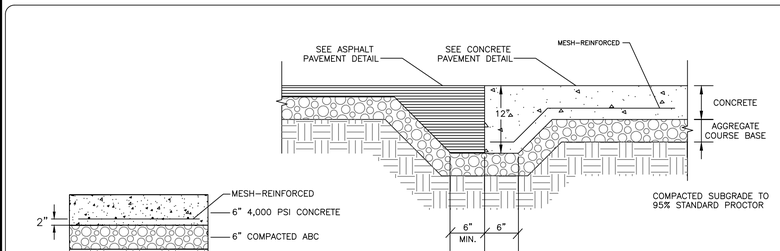

PAVEMENT SHALL BE CONSTRUCTED OF 4,000 PSI CONCRETE. REINFORCEMENT SHALL BE WELDED WIRE FABRIC SPACED 6" O. C. BOTH DIRECTIONS, AS INDICATED BELOW. SURFACE FINISHES AND JOINTS SHALL BE AS INDICATED IN SPECIFICATIONS.

CONCRETE PAVEMENT SECTION
NOT TO SCALE

ASPHALT TO CONCRETE TRANSITION
NOT TO SCALE

7 ASPHALT TO COCNRETE TRANSITION — SCALE: NTS

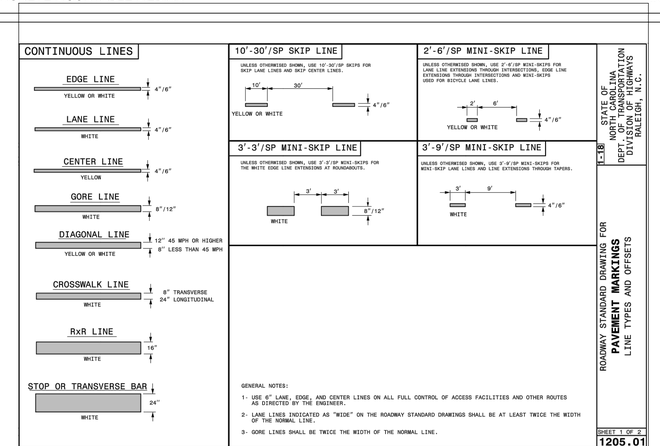

ROADWAY STANDARD DRAWING FOR **PAVEMENT MARKINGS** LINE TYPES AND OFFSETS

STATE OF NORTH CAROLINA DEPT. OF TRANSPORTATION DIVISION OF HIGHWAYS RALEIGH, N.C.

SHEET 2 OF 2 **1205.01**

4 PAVEMENT MARKINGS, LINE TYPES AND OFFSETS (SHEET 1 OF 2) — SCALE: NTS

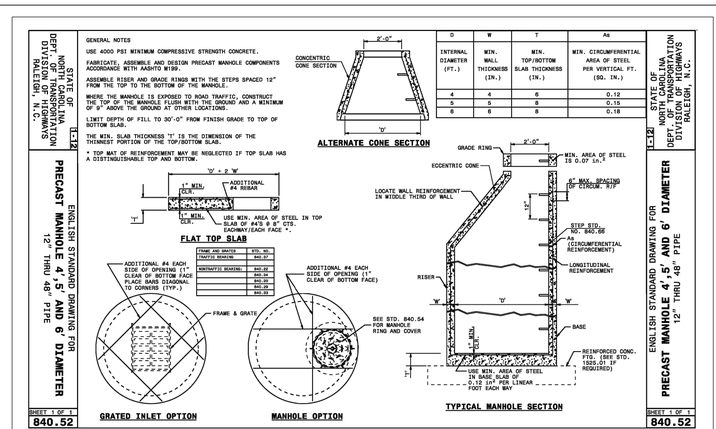

ENGLISH STANDARD DRAWING FOR **PRECAST MANHOLE 4', 5' AND 6' DIAMETER 12" THRU 48" PIPE**

STATE OF NORTH CAROLINA DEPT. OF TRANSPORTATION DIVISION OF HIGHWAYS RALEIGH, N.C.

SHEET 1 OF 1 **840.52**

1 PRECAST MANHOLE 4', 5', AND 6' DIAMETER — SCALE: NTS

REV.NO.	DESCRIPTIONS REVISIONS	DATE

SEAL

SEAL
NORTH CAROLINA PROFESSIONAL ENGINEER SEAL 025503 RICHARD A. MOORE
5/27/2020

McKIM&CREED
243 North Front Street
Wilmington, North Carolina 28401
Phone: (910)343-1048, Fax: (910)251-8282
License: F-1222
www.mckimcreed.com

D·R·HORTON® DHI Listed NYSE
America's Builder

SIDBURY FARMS
NEW HANOVER COUNTY, NORTH CAROLINA
STORM DRAINAGE DETAILS

DATE:	02/12/2020
MCE PROJ. #	4245-0012
DRAWN	RAS/JEB
DESIGNED	RAS/JEB
CHECKED	RAM
PROJ. MGR.	RAM

SCALE
HORIZONTAL: N/A
VERTICAL: N/A

M&C FILE NUMBER CG-502
DRAWING NUMBER 50

STATUS: TRC SUBMITTAL
REVISION

STRUCTURE TABLE

STRUCTURE NAME	DETAILS
CB-1-1	RIM = 36.68 INV IN = 24.31 INV IN = 24.31 INV OUT = 24.31
CB-1-2	RIM = 36.67 INV OUT = 24.43
CB-1-3	RIM = 37.30 INV IN = 24.97 INV IN = 24.97 INV OUT = 24.97
CB-1-4	RIM = 37.31 INV OUT = 25.09
CB-1-5	RIM = 37.22 INV IN = 29.33 INV OUT = 29.33
CB-1-6	RIM = 36.59 INV IN = 30.00 INV OUT = 30.00
CB-1-7	RIM = 36.58 INV OUT = 30.10
CB-1-8	RIM = 37.54 INV OUT = 29.03
CB-1-9	RIM = 37.54 INV IN = 28.91 INV IN = 28.91 INV OUT = 28.91
CB-1-10	RIM = 37.16 INV OUT = 29.50
CB-1-11	RIM = 37.16 INV IN = 29.38 INV OUT = 29.38
CB-1-12	RIM = 36.19 INV IN = 26.89 INV IN = 26.89 INV OUT = 26.89
CB-1-13	RIM = 36.19 INV OUT = 27.00
CB-1-14	RIM = 37.31 INV IN = 27.76 INV OUT = 27.76
CB-1-15	RIM = 36.86 INV IN = 28.52 INV IN = 28.52 INV OUT = 28.52
CB-1-16	RIM = 36.86 INV OUT = 28.63
CB-1-17	RIM = 37.40 INV IN = 30.19 INV IN = 30.19 INV OUT = 30.19
CB-1-18	RIM = 37.40 INV OUT = 30.30
CB-1-19	RIM = 37.53 INV IN = 32.22 INV IN = 32.22 INV OUT = 32.22
CB-1-20	RIM = 37.53 INV OUT = 32.33
CB-1-21	RIM = 37.68 INV IN = 34.26 INV OUT = 34.26
CB-1-22	RIM = 37.68 INV OUT = 34.37
CB-1-23	RIM = 38.19 INV IN = 34.00 INV OUT = 34.00
CB-1-24	RIM = 38.19 INV OUT = 34.11
CB-1-25	RIM = 38.34 INV IN = 31.31 INV IN = 33.80 INV OUT = 31.32
CB-1-26	RIM = 38.32 INV IN = 33.15 INV OUT = 33.15
CB-1-28	RIM = 36.78 INV IN = 27.96 INV IN = 27.96 INV OUT = 27.96
CB-1-29	RIM = 36.78 INV OUT = 28.08
CB-1-30	RIM = 37.08 INV IN = 28.55 INV IN = 28.55 INV OUT = 28.55
CB-1-31	RIM = 37.13 INV OUT = 28.67

STRUCTURE TABLE

STRUCTURE NAME	DETAILS
CB-1-32	RIM = 36.86 INV IN = 28.78 INV OUT = 28.78
CB-1-33	RIM = 37.07 INV IN = 28.91 INV OUT = 28.91
CB-1-34	RIM = 36.72 INV IN = 33.67 INV IN = 29.15 INV OUT = 29.15
CB-1-35	RIM = 36.80 INV OUT = 33.80
CB-1-36	RIM = 37.39 INV IN = 30.61 INV IN = 30.61 INV OUT = 30.61
CB-1-37	RIM = 37.39 INV OUT = 30.74
CB-1-38	RIM = 37.10 INV IN = 33.98 INV IN = 30.82 INV OUT = 30.82
CB-1-39	RIM = 37.10 INV OUT = 34.10
CB-1-40	RIM = 36.56 INV OUT = 31.33
FES-1-1	RIM = 28.05 INV IN = 26.26
O-1-1	RIM = 28.00 INV IN = 23.50
O-1-2	RIM = 29.33 INV IN = 27.00
SDMH-1-1	RIM = 37.54 INV IN = 25.45 INV IN = 28.78 INV IN = 29.20 INV OUT = 25.45
SDMH-1-2	RIM = 37.11 INV IN = 27.33 INV OUT = 27.33

STRUCTURE TABLE

STRUCTURE NAME	DETAILS
CB-2-1	RIM = 35.44 INV IN = 28.36 INV IN = 28.36 INV IN = 28.36 INV OUT = 28.36
CB-2-2	RIM = 35.44 INV OUT = 28.47
CB-2-3	RIM = 35.72 INV IN = 28.88 INV OUT = 28.88
CB-2-4	RIM = 35.70 INV OUT = 28.99
CB-2-6	RIM = 35.57 INV IN = 28.75 INV IN = 28.75 INV OUT = 28.75
CB-2-7	RIM = 35.57 INV OUT = 28.86
CB-2-8	RIM = 36.16 INV IN = 29.34 INV OUT = 29.34
CB-2-9	RIM = 36.17 INV OUT = 29.45
CB-2-10	RIM = 37.35 INV IN = 28.48 INV OUT = 28.48
CB-2-11	RIM = 36.45 INV IN = 29.51 INV IN = 29.51 INV OUT = 29.51
CB-2-12	RIM = 36.45 INV OUT = 29.64
CB-2-13	RIM = 36.86 INV IN = 31.59 INV OUT = 31.59
CB-2-14	RIM = 36.86 INV OUT = 31.72
CB-2-15	RIM = 35.67 INV IN = 31.76 INV IN = 31.76 INV OUT = 31.76
CB-2-16	RIM = 36.45 INV OUT = 31.87
CB-2-17	RIM = 36.94 INV IN = 32.20 INV OUT = 32.30
CB-2-18	RIM = 36.99 INV OUT = 32.31
CB-2-19	RIM = 33.74 INV IN = 30.70 INV IN = 30.70 INV OUT = 30.70
FES-2-1	RIM = 32.31 INV IN = 29.98
O-2-1	RIM = 29.83 INV IN = 27.50
O-2-2	RIM = 30.92 INV IN = 27.50

STRUCTURE TABLE

STRUCTURE NAME	DETAILS
CB-3-1	RIM = 37.63 INV OUT = 31.31
CB-3-2	RIM = 37.63 INV IN = 31.07 INV OUT = 31.07
CB-3-3	RIM = 37.42 INV IN = 30.65 INV IN = 30.65 INV OUT = 30.65
CB-3-4	RIM = 37.42 INV IN = 30.54 INV OUT = 30.54
CB-3-5	RIM = 36.91 INV IN = 31.20 INV IN = 31.20 INV OUT = 31.20
CB-3-6	RIM = 36.91 INV OUT = 31.33
CB-3-7	RIM = 38.18 INV IN = 32.16 INV IN = 32.16 INV OUT = 32.16
CB-3-8	RIM = 38.18 INV OUT = 32.29
CB-3-9	RIM = 37.21 INV IN = 32.64 INV IN = 32.64 INV OUT = 32.64
CB-3-10	RIM = 37.21 INV OUT = 32.77
CB-3-11	RIM = 37.65 INV IN = 33.12 INV OUT = 33.12
CB-3-12	RIM = 37.65 INV OUT = 33.25
CB-3-13	RIM = 37.29 INV IN = 31.17 INV IN = 31.17 INV OUT = 31.17
CB-3-14	RIM = 37.29 INV OUT = 31.29
CB-3-15	RIM = 37.24 INV IN = 32.05 INV IN = 32.05 INV OUT = 32.05
CB-3-16	RIM = 37.25 INV OUT = 32.23
CB-3-17	RIM = 37.93 INV IN = 32.51 INV IN = 32.51 INV OUT = 32.51
CB-3-18	RIM = 37.93 INV OUT = 32.63
CB-3-19	RIM = 38.54 INV IN = 32.88 INV OUT = 32.88
CB-3-20	RIM = 38.54 INV OUT = 32.96
CB-3-21	RIM = 37.64 INV IN = 32.21 INV IN = 32.21 INV OUT = 32.21
CB-3-22	RIM = 37.64 INV OUT = 32.45
CB-3-23	RIM = 38.09 INV IN = 33.16 INV IN = 33.16 INV OUT = 33.16
CB-3-24	RIM = 38.09 INV OUT = 33.27
CB-3-25	RIM = 38.48 INV IN = 33.68 INV OUT = 33.68

STRUCTURE TABLE

STRUCTURE NAME	DETAILS
CB-3-26	RIM = 38.48 INV OUT = 33.79
CB-3-27	RIM = 38.21 INV IN = 33.30 INV IN = 33.30 INV OUT = 33.30
CB-3-28	RIM = 38.21 INV OUT = 33.41
CB-3-29	RIM = 38.50 INV IN = 34.02 INV IN = 34.02 INV OUT = 34.02
CB-3-30	RIM = 38.50 INV OUT = 34.14
CB-3-31	RIM = 38.18 INV IN = 34.82 INV IN = 34.82 INV OUT = 34.82
CB-3-32	RIM = 38.18 INV OUT = 34.94
CB-3-33	RIM = 38.47 INV IN = 35.06 INV OUT = 35.06
CB-3-34	RIM = 38.47 INV OUT = 35.15
CB-3-35	RIM = 38.79 INV IN = 32.74 INV IN = 32.74 INV OUT = 32.74
CB-3-36	RIM = 38.09 INV IN = 31.59 INV IN = 31.59 INV OUT = 31.59
FES-3-1	RIM = 31.64 INV IN = 27.68
O-3-1	RIM = 33.96 INV IN = 30.00
O-3-2	RIM = 33.96 INV IN = 30.00
SDMH-3-1	RIM = 38.28 INV IN = 30.30 INV OUT = 30.30
SDMH-3-4	RIM = 38.95 INV IN = 34.44 INV OUT = 34.44
SDMH-3-5	RIM = 38.34 INV IN = 33.96 INV OUT = 29.34

STRUCTURE TABLE

STRUCTURE NAME	DETAILS
CB-4-1	RIM = 37.19 INV IN = 29.40 INV OUT = 29.40
CB-4-2	RIM = 37.19 INV OUT = 29.66
CB-4-3	RIM = 37.02 INV IN = 28.56 INV IN = 28.56 INV OUT = 28.56
CB-4-4	RIM = 37.02 INV OUT = 28.69
CB-4-5	RIM = 36.89 INV IN = 29.50 INV OUT = 29.50
CB-4-6	RIM = 36.89 INV OUT = 29.62
CB-4-7	RIM = 37.06 INV IN = 29.60 INV IN = 29.60 INV OUT = 29.60
CB-4-8	RIM = 37.06 INV OUT = 29.73
CB-4-9	RIM = 37.23 INV IN = 29.82 INV IN = 29.82 INV OUT = 29.82
CB-4-10	RIM = 37.23 INV OUT = 29.95
CB-4-11	RIM = 38.70 INV IN = 30.77 INV OUT = 30.77
CB-4-12	RIM = 38.70 INV OUT = 30.90
CB-4-13	RIM = 37.74 INV IN = 30.77 INV IN = 30.77 INV OUT = 30.77
CB-4-14	RIM = 37.74 INV OUT = 30.90
CB-4-15	RIM = 37.46 INV IN = 31.08 INV IN = 31.08 INV OUT = 31.08
CB-4-16	RIM = 37.46 INV OUT = 31.21
CB-4-17	RIM = 37.81 INV IN = 31.51 INV IN = 31.51 INV OUT = 31.51
CB-4-18	RIM = 37.81 INV OUT = 31.64
CB-4-19	RIM = 38.12 INV IN = 33.39 INV OUT = 33.39
CB-4-20	RIM = 38.13 INV OUT = 33.51
CB-4-21	RIM = 38.62 INV IN = 32.74 INV IN = 32.74 INV OUT = 32.74
CB-4-22	RIM = 38.61 INV OUT = 32.87
CB-4-23	RIM = 38.77 INV IN = 33.70 INV OUT = 33.70
CB-4-24	RIM = 38.78 INV OUT = 33.79
CB-4-25	RIM = 37.55 INV IN = 28.11 INV IN = 28.11 INV OUT = 28.11

STRUCTURE TABLE

STRUCTURE NAME	DETAILS
FES-4-1	RIM = 35.50 INV IN = 30.55
O-4-1	RIM = 32.54 INV IN = 27.50
SDMH-4-2	RIM = 37.72 INV IN = 29.11 INV IN = 29.11 INV OUT = 29.11
SDMH-4-3	RIM = 38.34 INV IN = 30.51 INV IN = 30.51 INV OUT = 30.51
SDMH-4-4	RIM = 40.16 INV IN = 32.34 INV IN = 32.34 INV OUT = 32.34
Structure - (144)	RIM = 31.44

1 STORM PIPE STRUCTURE AND PIPE TABLES

SCALE: NTS

REV.NO.	DESCRIPTIONS	DATE
	REVISIONS	

SEAL

SEAL

NORTH CAROLINA PROFESSIONAL SEAL 025503 ENGINEER RICHARD A. MOORE
5/27/2020

McKIM&CREED
243 North Front Street
Wilmington, North Carolina 28401
Phone: (910)343-1048, Fax: (910)251-8282
License: F-1222
www.mckimcreed.com

D·R·HORTON® DHI Listed NYSE
America's Builder

SIDBURY FARMS

NEW HANOVER COUNTY, NORTH CAROLINA

STORM DRAINAGE DETAILS

DATE:	02/12/2020
MCE PROJ. #	4245-0012
DRAWN	RAS/JEB
DESIGNED	RAS/JEB
CHECKED	RAM
PROJ. MGR.	RAM

SCALE
HORIZONTAL: N/A
VERTICAL: N/A

M&C FILE NUMBER CG-503
DRAWING NUMBER 51

STATUS: TRC SUBMITTAL
REVISION

STORM DRAINAGE PIPE DATA TABLE							
FROM	TO	LENGTH	SIZE	PIPE TYPE	SLOPE	UPSTREAM INVERT	DOWNSTREAM INVERT
SDMH-1-2	CB-1-12	100.30'	36"	HP	0.44%	27.33	26.89
SDMH-1-1	CB-1-3	106.74'	36"	HP	0.45%	25.45	24.97
CB-1-40	CB-1-38	102.50'	15"	HP	0.50%	31.33	30.82
CB-1-39	CB-1-38	24.00'	15"	HP	0.50%	34.10	33.98
CB-1-38	CB-1-36	41.02'	15"	HP	0.50%	30.82	30.61
CB-1-37	CB-1-36	26.36'	15"	HP	0.50%	30.74	30.61
CB-1-36	CB-1-34	292.06'	15"	HP	0.50%	30.61	29.15
CB-1-35	CB-1-34	26.07'	15"	HP	0.50%	33.80	33.67
CB-1-34	CB-1-33	48.27'	15"	HP	0.50%	29.15	28.91
CB-1-33	CB-1-32	26.29'	15"	HP	0.50%	28.91	28.78
CB-1-32	CB-1-30	45.51'	18"	HP	0.50%	28.78	28.55
CB-1-31	CB-1-30	24.99'	15"	HP	0.50%	28.67	28.55
CB-1-30	CB-1-28	118.59'	18"	HP	0.50%	28.55	27.96
CB-1-29	CB-1-28	24.00'	15"	HP	0.50%	28.08	27.96
CB-1-28	O-1-2	192.45'	24"	HP	0.50%	27.96	27.00
CB-1-26	CB-1-19	205.94'	18"	HP	0.45%	33.15	32.22
CB-1-25	CB-1-17	252.06'	30"	HP	0.45%	31.32	30.19
CB-1-24	CB-1-23	24.00'	15"	HP	0.45%	34.11	34.00
CB-1-23	CB-1-25	49.14'	15"	HP	0.41%	34.00	33.80
CB-1-22	CB-1-21	24.28'	15"	HP	0.45%	34.37	34.26
CB-1-21	CB-1-26	246.89'	18"	HP	0.45%	34.26	33.15
CB-1-20	CB-1-19	24.28'	15"	HP	0.45%	32.33	32.22
CB-1-19	CB-1-25	202.05'	24"	HP	0.45%	32.22	31.31
CB-1-18	CB-1-17	24.28'	15"	HP	0.45%	30.30	30.19
CB-1-17	CB-1-15	370.00'	30"	HP	0.45%	30.19	28.52
CB-1-16	CB-1-15	24.27'	15"	HP	0.45%	28.63	28.52
CB-1-15	CB-1-14	169.75'	36"	HP	0.45%	28.52	27.76
CB-1-14	SDMH-1-2	100.08'	36"	HP	0.43%	27.76	27.33
CB-1-13	CB-1-12	24.28'	15"	HP	0.45%	27.00	26.89
CB-1-12	SDMH-1-1	320.63'	36"	HP	0.45%	26.89	25.45
CB-1-11	CB-1-9	104.75'	15"	HP	0.45%	29.38	28.91
CB-1-10	CB-1-11	26.32'	15"	HP	0.45%	29.50	29.38
CB-1-9	SDMH-1-1	28.82'	15"	HP	0.45%	28.91	28.78
CB-1-8	CB-1-9	26.04'	15"	HP	0.45%	29.03	28.91
CB-1-7	CB-1-6	22.28'	15"	HP	0.45%	30.10	30.00
CB-1-6	CB-1-5	149.36'	15"	HP	0.45%	30.00	29.33
CB-1-5	SDMH-1-1	28.79'	15"	HP	0.45%	29.33	29.20
CB-1-4	CB-1-3	25.94'	15"	HP	0.45%	25.09	24.97
CB-1-3	CB-1-1	146.91'	48"	HP	0.45%	24.97	24.31
CB-1-2	CB-1-1	26.14'	15"	HP	0.45%	24.43	24.31
CB-1-1	O-1-1	209.28'	48"	HP	0.39%	24.31	23.50
	FES-1-1	147.95'	18"	HP	0.50%	27.00	26.26

STORM DRAINAGE PIPE DATA TABLE							
FROM	TO	LENGTH	SIZE	PIPE TYPE	SLOPE	UPSTREAM INVERT	DOWNSTREAM INVERT
CB-2-19	CB-2-11	238.16'	30"	HP	0.50%	30.70	29.51
CB-2-18	CB-2-17	22.00'	15"	HP	0.50%	32.31	32.20
CB-2-17	CB-2-15	107.61'	18"	HP	0.50%	32.30	31.76
CB-2-16	CB-2-15	22.15'	15"	HP	0.50%	31.87	31.76
CB-2-15	CB-2-19	201.58'	24"	HP	0.52%	31.76	30.70
CB-2-14	CB-2-13	26.28'	15"	HP	0.50%	31.72	31.59
CB-2-13	CB-2-19	178.38'	18"	HP	0.50%	31.59	30.70
CB-2-12	CB-2-11	26.00'	15"	HP	0.50%	29.64	29.51
CB-2-11	CB-2-10	206.65'	30"	HP	0.50%	29.51	28.48
CB-2-10	O-2-2	209.00'	36"	HP	0.47%	28.48	27.50
CB-2-9	CB-2-8	21.98'	15"	HP	0.50%	29.45	29.34
CB-2-8	CB-2-6	117.79'	15"	HP	0.50%	29.34	28.75
CB-2-7	CB-2-6	22.01'	15"	HP	0.50%	28.86	28.75
CB-2-6	CB-2-1	76.28'	18"	HP	0.51%	28.75	28.36
CB-2-4	CB-2-3	21.88'	15"	HP	0.50%	28.99	28.88
CB-2-3	CB-2-1	106.92'	15"	HP	0.49%	28.88	28.36
CB-2-2	CB-2-1	22.29'	15"	HP	0.49%	28.47	28.36
CB-2-1	O-2-1	184.39'	24"	HP	0.47%	28.36	27.50
	FES-2-1	104.96'	24"	HP	0.50%	30.50	29.98

STORM DRAINAGE PIPE DATA TABLE							
FROM	TO	LENGTH	SIZE	PIPE TYPE	SLOPE	UPSTREAM INVERT	DOWNSTREAM INVERT
SDMH-3-5	FES-3-1	182.10'	42"	HP	0.91%	29.34	27.68
SDMH-3-4	CB-3-29	139.38'	30"	HP	0.30%	34.44	34.02
SDMH-3-1	O-3-2	66.36'	42"	HP	0.45%	30.30	30.00
CB-3-36	CB-3-13	82.73'	42"	HP	0.51%	31.59	31.17
CB-3-35	CB-3-21	145.46'	36"	HP	0.36%	32.74	32.21
CB-3-34	CB-3-33	24.29'	15"	HP	0.37%	35.15	35.06
CB-3-33	CB-3-31	77.98'	18"	HP	0.31%	35.06	34.82
CB-3-32	CB-3-31	24.30'	15"	HP	0.49%	34.94	34.82
CB-3-31	SDMH-3-4	123.46'	24"	HP	0.31%	34.82	34.44
CB-3-30	CB-3-29	24.29'	15"	HP	0.49%	34.14	34.02
CB-3-29	CB-3-27	277.02'	30"	HP	0.26%	34.02	33.30
CB-3-28	CB-3-27	24.30'	15"	HP	0.45%	33.41	33.30
CB-3-27	CB-3-35	160.12'	36"	HP	0.35%	33.30	32.74
CB-3-26	CB-3-25	22.28'	15"	HP	0.49%	33.79	33.68
CB-3-25	CB-3-23	90.05'	18"	HP	0.58%	33.68	33.16
CB-3-24	CB-3-23	22.30'	15"	HP	0.49%	33.27	33.16
CB-3-23	CB-3-35	120.85'	24"	HP	0.35%	33.16	32.74
CB-3-22	CB-3-21	24.26'	15"	HP	0.99%	32.45	32.21
CB-3-21	CB-3-36	144.79'	36"	HP	0.43%	32.21	31.59
CB-3-20	CB-3-19	24.28'	15"	HP	0.33%	32.96	32.88
CB-3-19	CB-3-17	122.81'	18"	HP	0.30%	32.88	32.51
CB-3-18	CB-3-17	24.30'	15"	HP	0.49%	32.63	32.51
CB-3-17	CB-3-15	156.18'	24"	HP	0.30%	32.51	32.05
CB-3-16	CB-3-15	24.29'	15"	HP	0.74%	32.23	32.05
CB-3-15	CB-3-36	157.16'	30"	HP	0.29%	32.05	31.59
CB-3-14	CB-3-13	24.28'	15"	HP	0.49%	31.29	31.17
CB-3-13	SDMH-3-1	174.82'	42"	HP	0.50%	31.17	30.30
CB-3-12	CB-3-11	26.30'	15"	HP	0.49%	33.25	33.12
CB-3-11	CB-3-9	104.44'	18"	HP	0.46%	33.12	32.64
CB-3-10	CB-3-9	26.30'	15"	HP	0.49%	32.77	32.64
CB-3-9	CB-3-7	134.91'	24"	HP	0.36%	32.64	32.16
CB-3-8	CB-3-7	26.33'	15"	HP	0.49%	32.29	32.16
CB-3-7	CB-3-5	261.70'	30"	HP	0.37%	32.16	31.20
CB-3-6	CB-3-5	26.30'	15"	HP	0.49%	31.33	31.20
CB-3-5	CB-3-3	116.58'	36"	HP	0.47%	31.20	30.65
CB-3-4	O-3-1	176.11'	42"	HP	0.31%	30.54	30.00
CB-3-3	CB-3-4	26.26'	36"	HP	0.42%	30.65	30.54
CB-3-2	CB-3-3	42.18'	15"	HP	1.00%	31.07	30.65
CB-3-1	CB-3-2	24.31'	15"	HP	0.99%	31.31	31.07
	SDMH-3-5	100.12'	42"	HP	-3.96%	30.00	33.96

STORM DRAINAGE PIPE DATA TABLE							
FROM	TO	LENGTH	SIZE	PIPE TYPE	SLOPE	UPSTREAM INVERT	DOWNSTREAM INVERT
SDMH-4-4	CB-4-17	239.83'	24"	HP	0.35%	32.34	31.51
SDMH-4-3	CB-4-9	198.82'	36"	HP	0.35%	30.51	29.82
SDMH-4-2	CB-4-3	157.38'	36"	Concrete Pipe	0.35%	29.11	28.56
CB-4-25	O-4-1	175.05'	54"	HP	0.35%	28.11	27.50
CB-4-24	CB-4-23	26.14'	15"	HP	0.34%	33.79	33.70
CB-4-23	CB-4-21	285.28'	18"	HP	0.34%	33.70	32.74
CB-4-22	CB-4-21	26.13'	15"	HP	0.50%	32.87	32.74
CB-4-21	SDMH-4-4	108.27'	24"	HP	0.37%	32.74	32.34
CB-4-20	CB-4-19	24.31'	15"	HP	0.49%	33.51	33.39
CB-4-19	SDMH-4-4	209.68'	18"	HP	0.50%	33.39	32.34
CB-4-18	CB-4-17	26.29'	15"	HP	0.49%	31.64	31.51
CB-4-17	CB-4-15	115.38'	24"	HP	0.37%	31.51	31.08
CB-4-16	CB-4-15	26.29'	15"	HP	0.49%	31.21	31.08
CB-4-15	CB-4-13	99.08'	36"	HP	0.31%	31.08	30.77
CB-4-14	CB-4-13	26.29'	15"	HP	0.49%	30.90	30.77
CB-4-13	SDMH-4-3	76.01'	36"	HP	0.34%	30.77	30.51
CB-4-12	CB-4-11	26.29'	24"	HP	0.49%	30.90	30.77
CB-4-11	SDMH-4-3	51.62'	30"	HP	0.50%	30.77	30.51
CB-4-10	CB-4-9	26.30'	15"	HP	0.49%	29.95	29.82
CB-4-9	CB-4-7	67.57'	42"	HP	0.33%	29.82	29.60
CB-4-8	CB-4-7	26.30'	15"	HP	0.49%	29.73	29.60
CB-4-7	SDMH-4-2	135.87'	48"	Concrete Pipe	0.36%	29.60	29.11
CB-4-6	CB-4-5	24.29'	15"	HP	0.49%	29.62	29.50
CB-4-5	SDMH-4-2	82.30'	18"	HP	0.47%	29.50	29.11
CB-4-4	CB-4-3	26.29'	15"	HP	0.49%	28.69	28.56
CB-4-3	CB-4-25	129.09'	54"	HP	0.35%	28.56	28.11
CB-4-2	CB-4-1	26.30'	15"	HP	0.99%	29.66	29.40
CB-4-1	CB-4-25	120.10'	15"	HP	1.07%	29.40	28.11
	FES-4-1	90.53'	54"	HP	0.50%	31.00	30.55

1 STORM PIPE STRUCTURE AND PIPE TABLES

SCALE: NTS

REV.NO.	DESCRIPTIONS	DATE
	REVISIONS	

SEAL

SEAL

NORTH CAROLINA PROFESSIONAL SEAL 025503 ENGINEER RICHARD A. MOORE
5/27/2020

McKIM&CREED
243 North Front Street
Wilmington, North Carolina 28401
Phone: (910)343-1048, Fax: (910)251-8282
License: F-1222
www.mckimcreed.com

D·R·HORTON® DHI Listed NYSE
America's Builder

SIDBURY FARMS

NEW HANOVER COUNTY, NORTH CAROLINA

STORM DRAINAGE DETAILS

DATE:	02/12/2020
MCE PROJ. #	4245-0012
DRAWN	RAS/JEB
DESIGNED	RAS/JEB
CHECKED	RAM
PROJ. MGR.	RAM

SCALE
HORIZONTAL: 1"=50'
VERTICAL: 1"=5'

M&C FILE NUMBER CG-504
DRAWING NUMBER 52

STATUS: TRC SUBMITTAL
REVISION

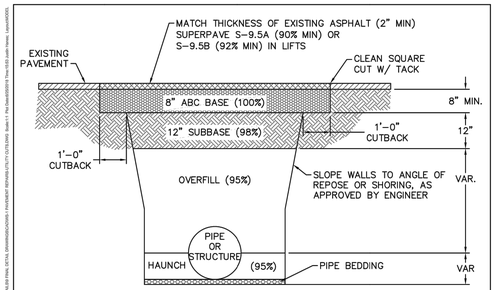

NOTES:

1. CONTRACTOR SHALL ENSURE BOTTOM OF TRENCH IS SUITABLE FOR INSTALLATION AND DOES NOT REQUIRE FOUNDATION CONDITIONING STONE.
2. FILL SHALL BE SUITABLE MATERIAL THAT IS FREE FROM HEAVY CLAY, GUMBOS, DEBRIS, ORGANICS AND LITTLE TO NO EXCESSIVE MOISTURE.
3. SELECT BACKFILL MAY BE SUBSTITUTED OR REQUIRED BY CITY TO ACHIEVE COMPACTION, (I.E. #57 STONE, ABC, CRUSHED LIMESTONE, CLEAN SAND, FLOWABLE FILL, ETC).
4. SOIL SHALL BE INSTALLED IN 6"-8" LIFTS AND COMPACTED BY A MECHANIZED TAMPER (I.E. JUMPING JACK). HOWEVER, VIBRATORY ROLLERS > 18" WIDTH MAY BE USED FOR LARGER EXCAVATIONS. THE PLATE TAMP METHOD SHALL NOT BE USED.
5. ALL APPROVED CASTINGS SHALL BE SET FLUSH TO GRADE AND SUPPORTED IF APPLICABLE.
6. COMPACT MATERIALS TO MINIMUM % DENSITY SHOWN IN DIAGRAM AS DETERMINED BY THE STANDARD PROCTOR METHOD ASTM D-698-A FOR SOILS, AND ASTM D-698-C FOR ABC STONE, AND BY NUCLEAR GAGE OR CORE SAMPLE FOR ASPHALT.
7. CUTBACKS OF ASPHALT SHALL BE PREPARED ON EDGE OF EXCAVATION OVER TOP OF UNDISTURBED SOIL.

(FOR PRIVATE ROADS AND PAVED AREAS; CONTRACTOR TO MEET MINIMUM REQUIREMENTS AS DEFINED BY RIGHT-OF-WAY OWNER FOR PUBLIC ROAD REPAIRS)

DETAIL: CITY OF WILMINGTON PAVEMENT REPAIRS-UTILITY CUTS		DETAIL NO: WS-1
SCALE: NOT TO SCALE	CFPUA DETAIL DATE: 01/01/19	SHEET NO: -
CFPUA REV. No: 1		

CAPE FEAR PUBLIC UTILITY AUTHORITY
235 GOVERNMENT CENTER DRIVE
WILMINGTON, NC 28403
OFFICE: (910)332-6560
Stewardship. Sustainability. Service.

8 C.O.W. PAVEMENT REPAIRS - UTILITY CUTS SCALE: NTS

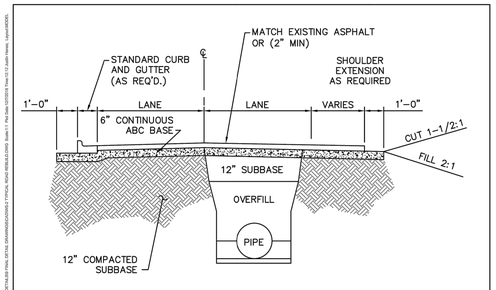

NOTES:

1. PAVEMENT RESTORATION DESIGN IS DEPENDEND ON CITY OF WILMINGTON STREET CUT POLICY AND PERMITTED CONDITIONS.
2. PIPE TRENCH AND COMPACTION REQUIREMENTS PER SPECIFICATIONS. SEE WS-1.

(FOR PRIVATE ROADS AND PAVED AREAS; CONTRACTOR TO MEET MINIMUM REQUIREMENTS AS DEFINED BY RIGHT-OF-WAY OWNER FOR PUBLIC ROAD REPAIRS)

DETAIL: CITY OF WILMINGTON TYPICAL ROAD REBUILD		DETAIL NO: WS-2
SCALE: NOT TO SCALE	CFPUA DETAIL DATE: 01/01/19	SHEET NO: -
CFPUA REV. No: 1		

CAPE FEAR PUBLIC UTILITY AUTHORITY
235 GOVERNMENT CENTER DRIVE
WILMINGTON, NC 28403
OFFICE: (910)332-6560
Stewardship. Sustainability. Service.

6 C.O.W. TYPICAL ROAD REBUILD SCALE: NTS

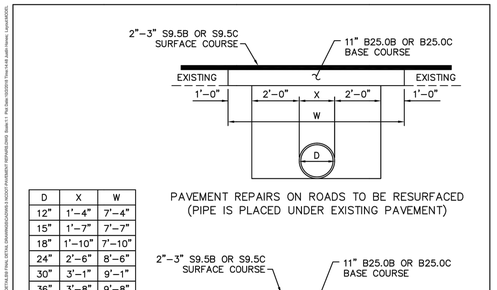

D	X	W
12"	1'-4"	7'-4"
15"	1'-7"	7'-7"
18"	1'-10"	7'-10"
24"	2'-6"	8'-6"
30"	3'-1"	9'-1"
36"	3'-8"	9'-8"
42"	4'-5"	10'-5"
48"	5'-0"	11'-0"

PAVEMENT REPAIRS ON ROADS TO BE RESURFACED
(PIPE IS PLACED UNDER EXISTING PAVEMENT)

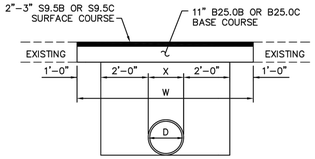

PAVEMENT REPAIRS ON ROADS NOT TO BE RESURFACED
(PIPE IS PLACED UNDER EXISTING PAVEMENT)

NOTE:

1. FOR REFERENCE, SEE NCDOT STANDARD 654.01

DETAIL: NCDOT-PAVEMENT REPAIRS		DETAIL NO: WS-3
SCALE: NOT TO SCALE	CFPUA DETAIL DATE: 01/01/19	SHEET NO: -
CFPUA REV. No: 1		

CAPE FEAR PUBLIC UTILITY AUTHORITY
235 GOVERNMENT CENTER DRIVE
WILMINGTON, NC 28403
OFFICE: (910)332-6560
Stewardship. Sustainability. Service.

4 NCDOT-PAVEMENT REPAIR SCALE: NTS

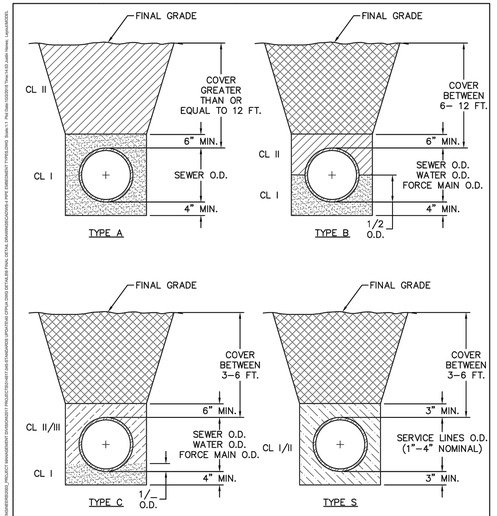

COMPACTION NOTES:

1. ALL ZONES: 95% STD EFFORT PER ASTM D698, EXCEPT AS STATED IN COMPACTION NOTE 2.
2. 12" SUBGRADE UNDER PAVEMENT: 98% STD EFFORT PER ASTM D698.

DETAIL: PIPE EMBEDMENT TYPES		DETAIL NO: WS-4
SCALE: NOT TO SCALE	CFPUA DETAIL DATE: 01/01/19	SHEET NO: -
CFPUA REV. No: 1		

CAPE FEAR PUBLIC UTILITY AUTHORITY
235 GOVERNMENT CENTER DRIVE
WILMINGTON, NC 28403
OFFICE: (910)332-6560
Stewardship. Sustainability. Service.

2 PIPE EMBEDMENT TYPES SCALE: NTS

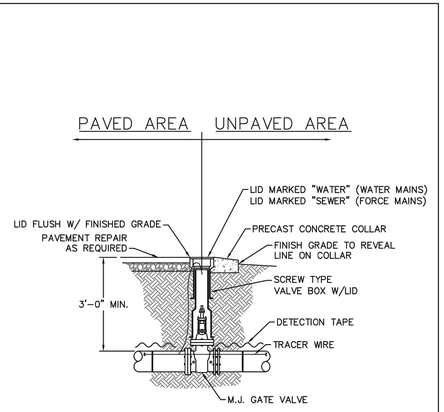

NOTES:

1. TRACER WIRE SHALL PENETRATE VALVE BOX THROUGH DRILLED HOLE APPROX. 6" BELOW GRADE WITH MINIMUM 2-FEET EXTRA LENGTH COILED IN THE VALVE BOX. SEE WS-6.

DETAIL: VALVE DETAIL		DETAIL NO: WS-5
SCALE: NOT TO SCALE	CFPUA DETAIL DATE: 01/01/19	SHEET NO: -
CFPUA REV. No: 1		

CAPE FEAR PUBLIC UTILITY AUTHORITY
235 GOVERNMENT CENTER DRIVE
WILMINGTON, NC 28403
OFFICE: (910)332-6560
Stewardship. Sustainability. Service.

7 VALVE DETAIL SCALE: NTS

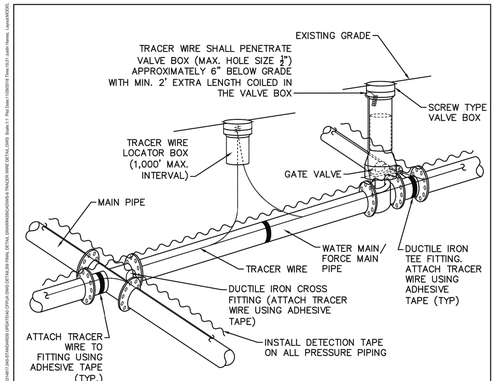

NOTES:

1. TRACER WIRE SHALL BE #10 COPPER SOLID CORE COPPER WIRE WITH GAS AND OIL RESISTANT INSULATION AND DIRECT BURY RATING.
2. WIRE SHALL BE STRAPPED TO ALL PVC PIPING WITH ADHESIVE TAPE AT 12 FOOT INTERVALS.
3. SECURE WIRE TO ALL TEE AND CROSS FITTINGS WITH ADHESIVE TAPE.
4. ALL SPLICES IN THE WIRE SHALL BE MADE WITH 3M DBR DIRECT BURY SPLICE KITS.

DETAIL: TRACER WIRE DETAIL		DETAIL NO: WS-6
SCALE: NOT TO SCALE	CFPUA DETAIL DATE: 01/01/19	SHEET NO: -
CFPUA REV. No: 1		

CAPE FEAR PUBLIC UTILITY AUTHORITY
235 GOVERNMENT CENTER DRIVE
WILMINGTON, NC 28403
OFFICE: (910)332-6560
Stewardship. Sustainability. Service.

5 TRACER WIRE DETAIL SCALE: NTS

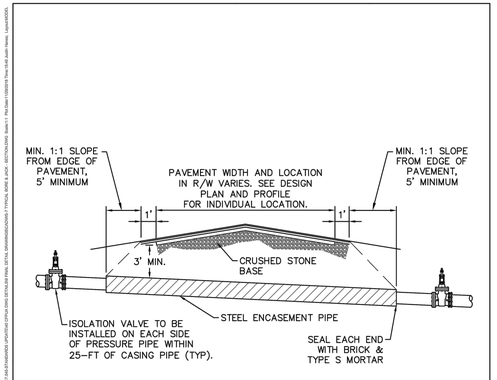

NOTES:

1. CASING WILL BE INSTALLED AT LINE AND GRADE SHOWN ON INDIVIDUAL PROFILE FOR EACH CROSSING. BORING/JACKING TO LINE AND GRADE IS REQUIRED.
2. TRACER WIRE SHALL BE TAPED AT 12' INTERVALS THROUGHOUT THE CASING.
3. PIPING THROUGH CASING SHALL BE RESTRAINED JOINT.
4. SEE DETAIL WS-8 FOR PIPE CASING SUPPORT DETAILS.

DETAIL: TYPICAL BORING & JACKING DETAIL		DETAIL NO: WS-7
SCALE: NOT TO SCALE	CFPUA DETAIL DATE: 01/01/19	SHEET NO: -
CFPUA REV. No: 1		

CAPE FEAR PUBLIC UTILITY AUTHORITY
235 GOVERNMENT CENTER DRIVE
WILMINGTON, NC 28403
OFFICE: (910)332-6560
Stewardship. Sustainability. Service.

3 TYPICAL BORING & JACK DETAIL SCALE: NTS

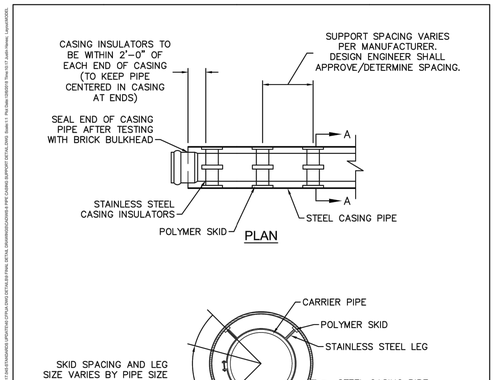

NOTES:

1. PIPE SUPPORTS TO BE PLACED TO PROVIDE PROPER SPACING, ALIGNMENT, AND GRADE AS SPECIFIED. OIL, GREASE, OR PETROLEUM PRODUCT MAY NOT BE USED AS LUBRICANT.

DETAIL: PIPE CASING SUPPORT DETAIL		DETAIL NO: WS-8
SCALE: NOT TO SCALE	CFPUA DETAIL DATE: 01/01/19	SHEET NO: -
CFPUA REV. No: 1		

CAPE FEAR PUBLIC UTILITY AUTHORITY
235 GOVERNMENT CENTER DRIVE
WILMINGTON, NC 28403
OFFICE: (910)332-6560
Stewardship. Sustainability. Service.

1 PIPE CASING SUPPORT DETAIL SCALE: NTS

REV.NO.	DESCRIPTIONS	DATE
	REVISIONS	

SEAL

SEAL
NORTH CAROLINA PROFESSIONAL ENGINEER SEAL 025503 RICHARD A. MOORE
5/27/2020

McKIM&CREED
243 North Front Street
Wilmington, North Carolina 28401
Phone: (910)343-1048, Fax: (910)251-8282
License: F-1222
www.mckimcreed.com

D·R·HORTON® DHI Listed NYSE
America's Builder

SIDBURY FARMS
NEW HANOVER COUNTY, NORTH CAROLINA
CFPUA DETAILS

DATE:	02/12/2020
MCE PROJ. #	4245-0012
DRAWN	RAS/JEB
DESIGNED	RAS/JEB
CHECKED	RAM
PROJ. MGR.	RAM

SCALE
HORIZONTAL: N/A
VERTICAL: N/A

M&C FILE NUMBER: CU-501
DRAWING NUMBER: 53

STATUS: TRC SUBMITTAL
REVISION

CAPE FEAR PUBLIC UTILITY AUTHORITY STANDARD NOTES:

1. ALL PROPOSED ADDITIONS TO THE CAPE FEAR PUBLIC UTILITY AUTHORITY (CFPUA) WATER DISTRIBUTION AND SANITARY SEWER COLLECTION SYSTEMS, AS SHOWN AND SPECIFIED HEREIN, SHALL BE DESIGNED AND CONSTRUCTED TO CONFORM TO STATE RULES AND THE CFPUA'S MINIMUM TECHNICAL STANDARDS. THE CFPUA MINIMUM TECHNICAL STANDARDS ARE CONTAINED IN THE CURRENT DESIGN GUIDANCE MANUAL, MATERIAL SPECIFICATION MANUAL, TECHNICAL SPECIFICATIONS FOR CONSTRUCTION, AND STANDARD DRAWING DETAILS.
2. SEWER GUARDS REQUIRED AT ALL MANHOLES. STAINLESS STEEL SEWER GUARDS REQUIRED AT MANHOLES LOCATED IN TRAFFIC AREAS.
3. WATER AND SEWER SERVICES SHALL BE PERPENDICULAR TO MAIN AND TERMINATE 18" INSIDE RIGHT-OF-WAY LINE. SEWER SERVICES IN CUL-DE-SACS ARE REQUIRED TO BE PERPENDICULAR, OR MUST ORIGINATE IN END OF LINE MANHOLE AND TERMINATE 18" INSIDE RIGHT-OF-WAY LINE.
4. ALL SEWER SERVICES CONNECTING INTO DUCTILE IRON MAINS SHALL ALSO BE CONSTRUCTED OF DIP.
5. MINIMUM 10' UTILITIES EASEMENT PROVIDED ALONG THE FRONTAGE OF ALL LOTS AND AS SHOWN FOR NEW DEVELOPMENTS.
6. NO FLEXIBLE COUPLINGS SHALL BE USED.
7. ALL STAINLESS STEEL FASTENERS SHALL BE TYPE 316.
8. CLEANOUTS SHALL BE LOCATED A MINIMUM OF 12 FEET FROM ALL PROPERTY CORNERS.
9. WATER METER BOXES ARE TO BE A MINIMUM OF 5 FEET FROM THE PROPERTY CORNER.
10. UNUSED SERVICES SHALL BE ABANDONED. ABANDONED WATER SERVICES SHALL BE DISCONNECTED FROM MAIN.
11. A MINIMUM OF 10' OF MAIN LINE SHALL BE REPLACED FOR NEW CONNECTIONS TO EXISTING CLAY GRAVITY SEWER MAINS.

DETAIL: STANDARD NOTES (REQUIRED ON ALL PLAN AND PROFILE SHEETS) | SCALE: NOT TO SCALE | CFPUA DETAIL DATE: 01/02/19 | CFPUA REV. No: 2 | DETAIL NO: WS-14 | SHEET NO: -

CAPE FEAR PUBLIC UTILITY AUTHORITY
235 GOVERNMENT CENTER DRIVE
WILMINGTON, NC 28403
OFFICE: (910)332-6560
Stewardship. Sustainability. Service.

6 STANDARD NOTES SCALE: NTS

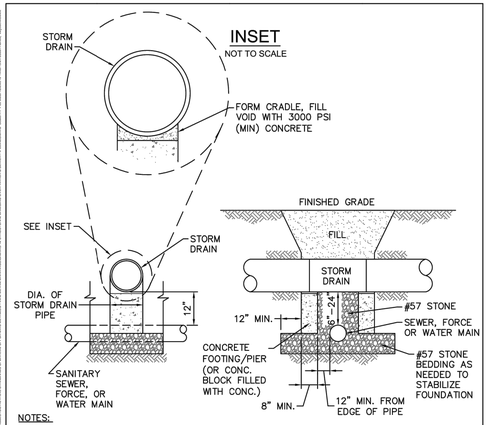

NOTES:

1. PIPELINE BRIDGING REQUIRED FOR VERTICAL SEPARATION 6"-24".
2. VERTICAL SEPARATION LESS THAN 6" IS NOT PERMITTED.
3. NO PIPE JOINTS ON STORM DRAINS BETWEEN PIERS.
4. WHEN SANITARY SEWER CROSSES OVER A WATER MAIN, BOTH PIPELINES SHALL BE PRESSURE RATED DUCTILE IRON PIPE AND JOINTS FOR 10' (MINIMUM) ON EACH SIDE OF THE POINT OF CROSSING.

DETAIL: STRUCTURAL BRIDGING OVER WATER & SEWER PIPELINES | SCALE: NOT TO SCALE | CFPUA DETAIL DATE: 01/01/19 | CFPUA REV. No: 1 | DETAIL NO: WS-12 | SHEET NO: -

CAPE FEAR PUBLIC UTILITY AUTHORITY
235 GOVERNMENT CENTER DRIVE
WILMINGTON, NC 28403
OFFICE: (910)332-6560
Stewardship. Sustainability. Service.

4 STRUCTURAL BRIDGING OVER WATER & SEWER PIPELINES SCALE: NTS

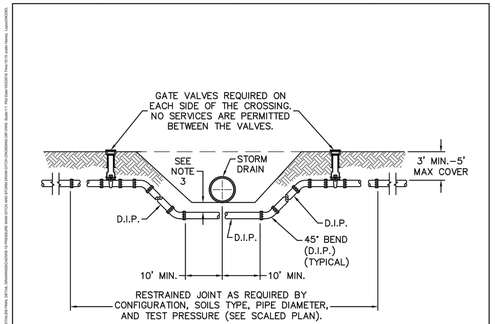

NOTES:

1. USE PRESSURE CLASS 350 DIP, UNLESS SPECIFIED OTHERWISE.
2. ALL BURIED PIPES, VALVES AND FITTINGS SHALL BE RESTRAINED.
3. MINIMUM DEPTH REQUIRED, UNLESS SPECIFIED OTHERWISE BY CFPUA:
   a. IN DOT R/W, 36" MIN. TYPICAL, OR 24" MIN. WHEN CROSSING A DITCH LINE.
   b. ALL OTHER LOCATIONS, 30" MIN.
   c. WHEN STORM DRAIN INVERT IS BURIED AT OR BELOW ABOVE DEPTHS, WATER MAIN AND STORM DRAIN SHALL BE CONSTRUCTED OF FERROUS MATERIALS WITH JOINTS EQUIVALENT TO WATER MAIN STANDARDS FOR A DISTANCE OF 10-FEET EACH SIDE OF THE POINT OF CROSSING.

DETAIL: PRESSURE MAIN DITCH AND STORM DRAIN DITCH CROSSING-DIP | SCALE: NOT TO SCALE | CFPUA DETAIL DATE: 01/01/19 | CFPUA REV. No: 1 | DETAIL NO: WS-10 | SHEET NO: -

CAPE FEAR PUBLIC UTILITY AUTHORITY
235 GOVERNMENT CENTER DRIVE
WILMINGTON, NC 28403
OFFICE: (910)332-6560
Stewardship. Sustainability. Service.

2 PRESSURE MAIN DITCH AND STORM DRAIN DITCH CROSSING - DIP SCALE: NTS

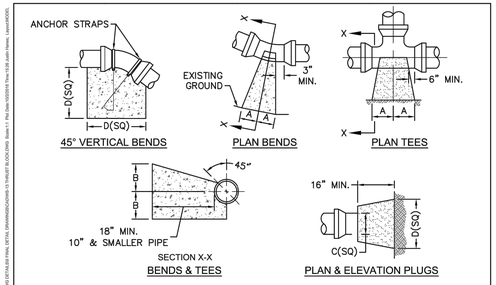

SIZE	90 BENDS A	90 BENDS B	45 BENDS A	45 BENDS B	22-1/2 BENDS A	22-1/2 BENDS B	TEES/PLUGS A	TEES/PLUGS B	45 VERT. BENDS
3"	8"	6"	5"	6"	3"	7"	6"	8"	27"
4"	8"	9"	5"	8"	3"	11"	6"	9"	28"
6"	14"	11"	9"	9"	8"	8"	12"	9"	36"
8"	16"	16"	12"	12"	10"	13"	14"	13"	42"
10"	18"	22"	15"	14"	14"	16"	18"	15"	50"
12"	20"	28"	18"	17"	16"	16"	22"	18"	62"
14"	26"	29"	21"	19"	18"	18"	26"	20"	72"
16"	33"	29"	25"	21"	20"	21"	32"	21"	83"
18"	40"	30"	28"	24"	22"	23"	36"	24"	88"

NOTES:

1. THRUST BLOCKING IS NOT PERMITTED EXCEPT IN SPECIAL INSTALLATIONS WHERE DESIGNED BY ENGINEER AND APPROVED BY CFPUA.
2. ALLOW 7-DAY MINIMUM CONCRETE CURE TIME BEFORE PLACING LOAD ON THRUST BLOCK
3. BASED ON 160 PSI TEST PRESSURE AND 2,000 PSF SOIL BEARING CAPACITY.
4. ALL BEARING SURFACES TO BE CARRIED TO UNDISTURBED GROUND.
5. PIPE & FITTINGS TO BE WRAPPED IN 10 MIL PLASTIC PRIOR TO THRUST BLOCK BEING POURED.

DETAIL: THRUST BLOCK | SCALE: NOT TO SCALE | CFPUA DETAIL DATE: 01/01/19 | CFPUA REV. No: 1 | DETAIL NO: WS-13 | SHEET NO: -

CAPE FEAR PUBLIC UTILITY AUTHORITY
235 GOVERNMENT CENTER DRIVE
WILMINGTON, NC 28403
OFFICE: (910)332-6560
Stewardship. Sustainability. Service.

5 THRUST BLOCK SCALE: NTS

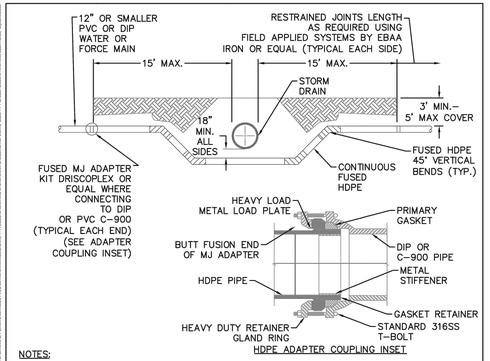

NOTES:

1. MAY BE USED AS AN ALTERNATIVE TO CFPUA STANDARD DETAIL WS-10 (STORM CROSSING) WITH APPROVAL BY CFPUA. SHALL NOT BE USED FOR DITCH CROSSINGS.
2. NO SERVICE CONNECTIONS, VALVES, TEES, ADDITIONAL FITTINGS OR APPURTENANCES SHALL BE INSTALLED ON HDPE.
3. 45° VERTICAL BENDS MAY BE ELIMINATED IF OFFSET CAN BE ACHIEVED BY DEFLECTING PIPE WITHIN MANUFACTURER'S MAXIMUM BENDING RADIUS.
4. HDPE SHALL BE A MINIMUM OF DR-11 (200 PSI), DIPS, PE 4710, BLUE POTABLE WATER MAINS AND GREEN SEWER FORCE MAINS. INSTALLATIONS IN PUBLIC RIGHT-OF-WAY ARE SUBJECT TO NC DOT REQUIREMENTS, WHICH MAY INCLUDE USE OF DR-9 HDPE.
5. 45° VERTICAL BENDS MAY BE FUSED BY SUPPLIER PRIOR TO DELIVERY TO SITE. IF THE ASSEMBLY IS FUSED ONSITE, IT MUST BE PRESSURE TESTED.

DETAIL: PRESSURE MAIN AND STORM DRAIN CROSSING-HDPE | SCALE: NOT TO SCALE | CFPUA DETAIL DATE: 01/01/19 | CFPUA REV. No: 1 | DETAIL NO: WS-11 | SHEET NO: -

CAPE FEAR PUBLIC UTILITY AUTHORITY
235 GOVERNMENT CENTER DRIVE
WILMINGTON, NC 28403
OFFICE: (910)332-6560
Stewardship. Sustainability. Service.

3 PRESSURE MAIN AND STORM DRAIN CROSSING - HDPE SCALE: NTS

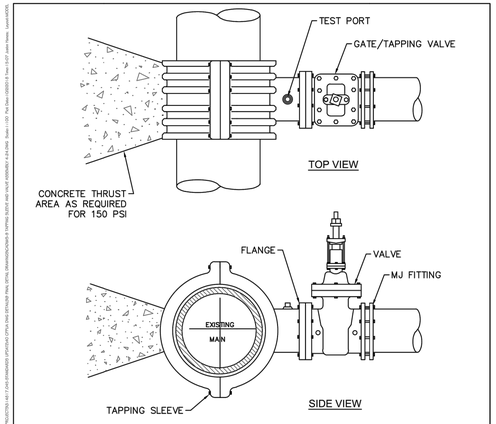

NOTES:

1. CONCRETE SHALL NOT CONTACT BOLTS OR ENDS OF MECHANICAL JOINT FITTINGS.
2. TEST PRESSURE SHALL NOT BE APPLIED FOR A MINIMUM OF 7 DAYS AFTER THRUST BLOCK PLACEMENT.
3. BRANCH SHALL NOT EQUAL RUN DIAMETER UNLESS APPROVED BY CFPUA ENGINEERING.
4. TAPPING SLEEVE & VALVE TO BE HYDROSTATICALLY TESTED AT 150 PSI FOR 15 MINUTES WITH ZERO PRESSURE LOSS.

DETAIL: TAPPING SLEEVE AND VALVE ASSEMBLY (4"-24") | SCALE: NOT TO SCALE | CFPUA DETAIL DATE: 01/01/19 | CFPUA REV. No: 1 | DETAIL NO: WS-9 | SHEET NO: -

CAPE FEAR PUBLIC UTILITY AUTHORITY
235 GOVERNMENT CENTER DRIVE
WILMINGTON, NC 28403
OFFICE: (910)332-6560
Stewardship. Sustainability. Service.

1 TAPPING SLEEVE AND VALVE ASSEMBLY (4"-24") SCALE: NTS

REV.NO.	DESCRIPTIONS	DATE

REVISIONS

SEAL

SEAL
NORTH CAROLINA PROFESSIONAL ENGINEER SEAL 025503 RICHARD A. MOORE
5/27/2020

McKIM&CREED
243 North Front Street
Wilmington, North Carolina 28401
Phone: (910)343-1048, Fax: (910)251-8282
License: F-1222
www.mckimcreed.com

D·R·HORTON® DHI Listed NYSE
America's Builder

SIDBURY FARMS
NEW HANOVER COUNTY, NORTH CAROLINA
CFPUA DETAILS

DATE:	02/12/2020
MCE PROJ. #	4245-0012
DRAWN	RAS/JEB
DESIGNED	RAS/JEB
CHECKED	RAM
PROJ. MGR.	RAM

SCALE
HORIZONTAL: N/A
VERTICAL: N/A

MAC FILE NUMBER: CU-502
DRAWING NUMBER: 54

STATUS: TRC SUBMITTAL
REVISION

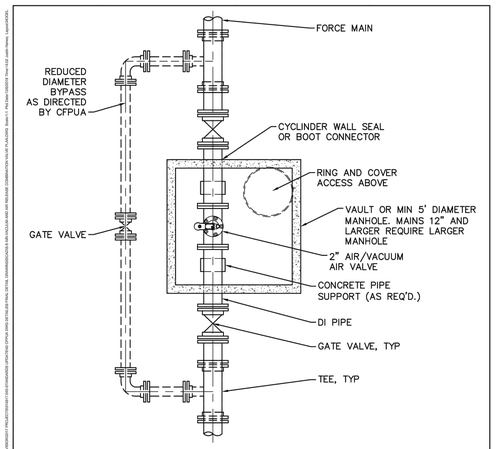

NOTES:

1. BYPASS REQUIRED FOR 12" AND LARGER FORCE MAINS.
2. CONTRACTOR TO INSTALL VALVE AND MANHOLE AT SUFFICIENT DEPTH TO ALLOW FOR ACCESS.
3. FORCE MAIN TO BE OFFSET TO KEEP AREA BELOW LID CLEAR.
4. ALL BURIED PIPES, VALVES AND FITTING SHALL BE RESTRAINED

DETAIL: AIR/ VACUUM AND AIR RELEASE COMBINATION VALVE PLAN		CAPE FEAR PUBLIC UTILITY AUTHORITY 235 GOVERNMENT CENTER DRIVE WILMINGTON, NC 28403 OFFICE: (910)332-6560 Stewardship. Sustainability. Service.	DETAIL NO: S-8
SCALE: NOT TO SCALE	CFPUA DETAIL DATE: 01/01/19		SHEET NO: -
CFPUA REV. No: 1			

8 AIR/VACUUM AND AIR RELEASE COMBINATION VALVE PLAN SCALE: NTS

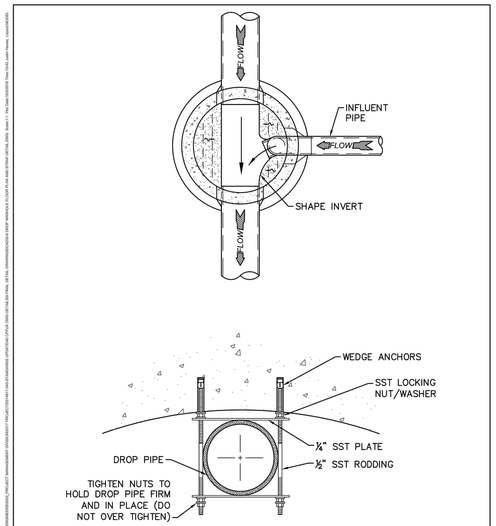

NOTE: ALL PARTS TO BE 316 SST.

DETAIL: DROP MANHOLE FLOOR PLAN AND STRAP DETAIL		CAPE FEAR PUBLIC UTILITY AUTHORITY 235 GOVERNMENT CENTER DRIVE WILMINGTON, NC 28403 OFFICE: (910)332-6560 Stewardship. Sustainability. Service.	DETAIL NO: S-6
SCALE: NOT TO SCALE	CFPUA DETAIL DATE: 01/01/19		SHEET NO: -
CFPUA REV. No: 1			

6 DROP MANHOLE FLOOR PLAN AND STRAP DETAIL SCALE: NTS

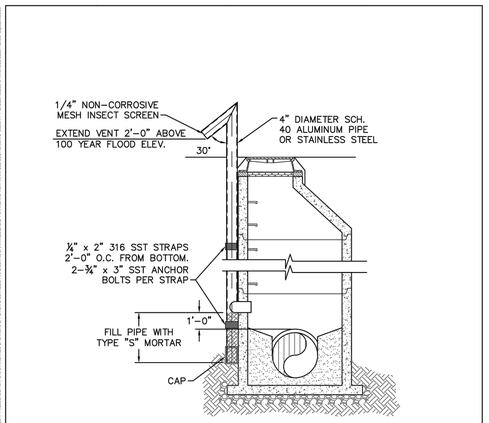

NOTES:

1. ALTERNATIVE VENTING METHODS AS APPROVED BY CFPUA ARE REQUIRED AT RESIDENTIAL LOCATIONS.
2. VENT MANHOLES SHALL BE PLACED AT PROPERTY CORNERS.

DETAIL: STANDARD VENT MANHOLE SECTION		CAPE FEAR PUBLIC UTILITY AUTHORITY 235 GOVERNMENT CENTER DRIVE WILMINGTON, NC 28403 OFFICE: (910)332-6560 Stewardship. Sustainability. Service.	DETAIL NO: S-4
SCALE: NOT TO SCALE	CFPUA DETAIL DATE: 01/01/19		SHEET NO: -
CFPUA REV. No: 1			

4 STANDARD VENT MANHOLE SECTION SCALE: NTS

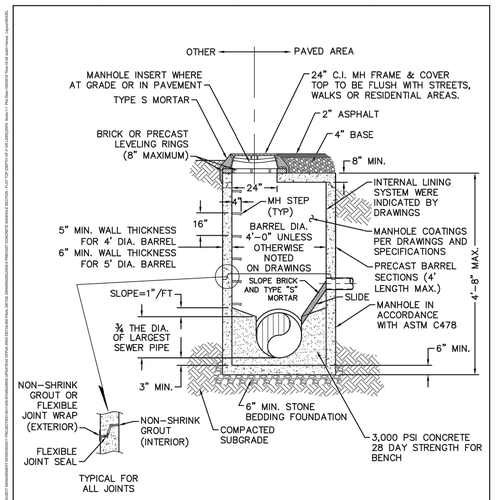

FOR LESS THAN 30" INSIDE DROP

DETAIL: PRECAST CONCRETE MANHOLE SECTION - FLAT TOP (DEPTH 4' OR LESS)		CAPE FEAR PUBLIC UTILITY AUTHORITY 235 GOVERNMENT CENTER DRIVE WILMINGTON, NC 28403 OFFICE: (910)332-6560 Stewardship. Sustainability. Service.	DETAIL NO: S-2
SCALE: NOT TO SCALE	CFPUA DETAIL DATE: 01/01/19		SHEET NO: -
CFPUA REV. No: 1			

2 PRECAST CONCRETE MANHOLE SECTION-FLAT TOP (DEPTH 4" OR LESS) SCALE: NTS

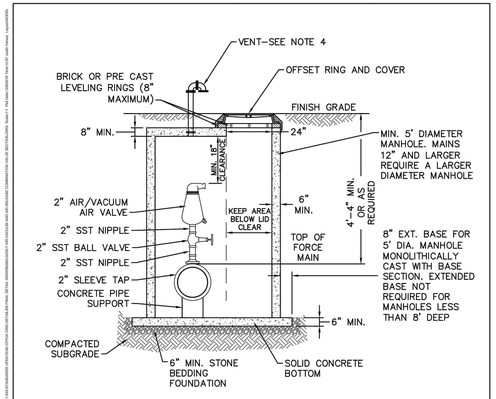

NOTES:

1. CONTRACTOR TO INSTALL VALVE AND MANHOLE AT SUFFICIENT DEPTH TO ALLOW FOR ACCESS.
2. FORCE MAIN TO BE OFFSET IN MANHOLE TO KEEP AREA BELOW LID CLEAR.
3. USE CAST IN RUBBER BOOT WITH SST. CLAMPS FOR ALL MH CONNECTIONS, INCLUDING FORCE MAIN.
4. PROVIDE VENT PIPING WHEN LOCATED WITHIN THE 100 YEAR FLOOD PLAIN. VENT PIPING SHALL BE MADE OF DIP WITH A NON FERROUS INSECT SCREEN AND SHALL BE LOCATED 2-FEET ABOVE THE 100 YEAR FLOOD PLAIN.

DETAIL: AIR/ VACUUM AND AIR RELEASE COMBINATION VALVE SECTION		CAPE FEAR PUBLIC UTILITY AUTHORITY 235 GOVERNMENT CENTER DRIVE WILMINGTON, NC 28403 OFFICE: (910)332-6560 Stewardship. Sustainability. Service.	DETAIL NO: S-7
SCALE: NOT TO SCALE	CFPUA DETAIL DATE: 01/01/19		SHEET NO: -
CFPUA REV. No: 1			

7 AIR/VACUUM AIR RELEASE COMBINATION VALVE SECTION SCALE: NTS

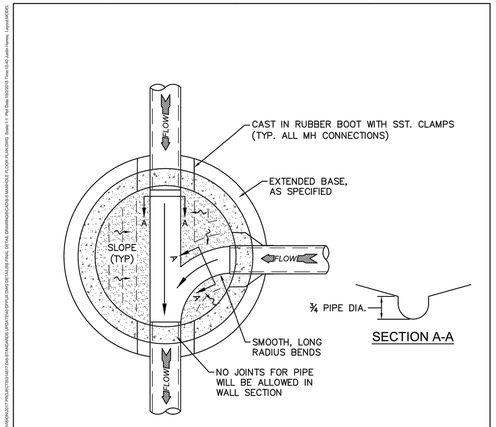

DETAIL: MANHOLE FLOOR PLAN		CAPE FEAR PUBLIC UTILITY AUTHORITY 235 GOVERNMENT CENTER DRIVE WILMINGTON, NC 28403 OFFICE: (910)332-6560 Stewardship. Sustainability. Service.	DETAIL NO: S-5
SCALE: NOT TO SCALE	CFPUA DETAIL DATE: 01/01/19		SHEET NO: -
CFPUA REV. No: 1			

5 MANHOLE FLOOR PLAN SCALE: NTS

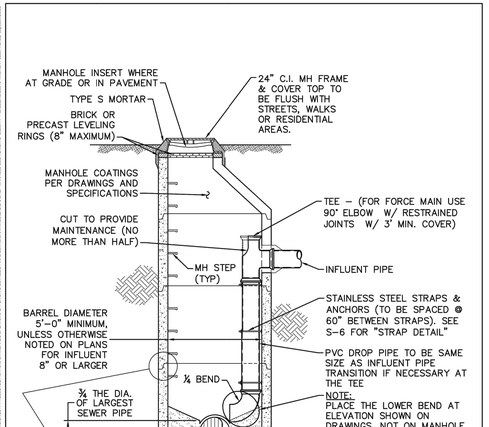

FOR MORE THAN 30" INSIDE DROP

DETAIL: DROP MANHOLE SECTION		CAPE FEAR PUBLIC UTILITY AUTHORITY 235 GOVERNMENT CENTER DRIVE WILMINGTON, NC 28403 OFFICE: (910)332-6560 Stewardship. Sustainability. Service.	DETAIL NO: S-3
SCALE: NOT TO SCALE	CFPUA DETAIL DATE: 01/01/19		SHEET NO: -
CFPUA REV. No: 1			

3 DROP MANHOLE SECTION SCALE: NTS

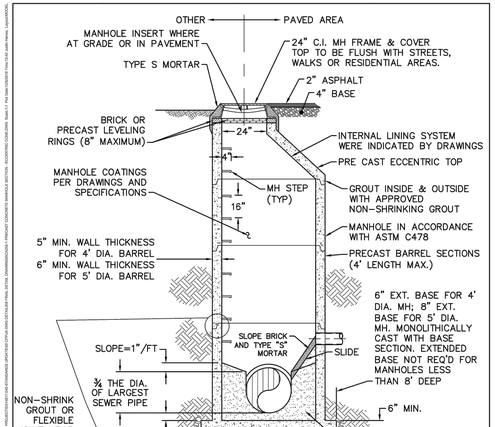

NOTES:

1. FOR MANHOLES UP TO 12 FEET IN DEPTH MINIMUM BARREL DIAMETER SHALL BE 4 FEET. MANHOLES GREATER THAN 12 FEET IN DEPTH SHALL BE A MINIMUM OF 5 FEET IN DIAMETER.

FOR LESS THAN 30" INSIDE DROP

DETAIL: PRECAST CONCRETE MANHOLE SECTION - ECCENTRIC CONE		CAPE FEAR PUBLIC UTILITY AUTHORITY 235 GOVERNMENT CENTER DRIVE WILMINGTON, NC 28403 OFFICE: (910)332-6560 Stewardship. Sustainability. Service.	DETAIL NO: S-1
SCALE: NOT TO SCALE	CFPUA DETAIL DATE: 01/01/19		SHEET NO: -
CFPUA REV. No: 1			

1 PRECAST CONCRETE MANHOLE SECTION - ECCENTRIC CONE SCALE: NTS

REV.NO.	DESCRIPTIONS	DATE
	REVISIONS	

SEAL

SEAL
NORTH CAROLINA PROFESSIONAL ENGINEER SEAL 025503 RICHARD A. MOORE
5/27/2020

McKIM&CREED
243 North Front Street
Wilmington, North Carolina 28401
Phone: (910)343-1048, Fax: (910)251-8282
License: F-1222
www.mckimcreed.com

D·R·HORTON® DHI Listed NYSE America's Builder

SIDBURY FARMS

NEW HANOVER COUNTY, NORTH CAROLINA

CFPUA DETAILS

DATE:	02/12/2020
MCE PROJ. #	4245-0012
DRAWN	RAS/JEB
DESIGNED	RAS/JEB
CHECKED	RAM
PROJ. MGR.	RAM

SCALE
HORIZONTAL: N/A
VERTICAL: N/A

M&C FILE NUMBER CU-503
DRAWING NUMBER 55

STATUS: TRC SUBMITTAL REVISION

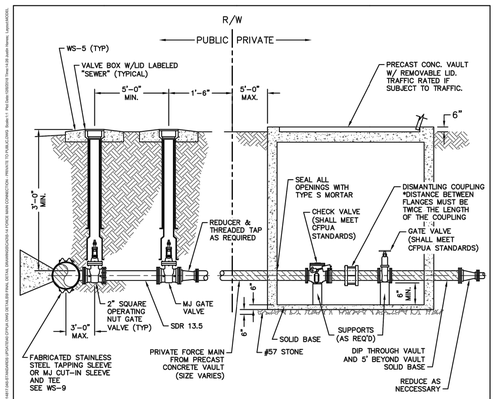

NOTES:

1. FOR 2-INCH FORCE MAINS, CFPUA ACCEPTS SDR 13.5 OR SDR-21 PVC INSTALLED BY OPEN TRENCH OR SDR-9 HDPE BY HORIZONTAL DIRECTIONAL DRILLING.
2. A GATE VALVE IS REQUIRED AT THE CFPUA FORCE MAIN TAP LOCATION.
3. WHEN PRIVATE MAIN IS FROM OPPOSITE SIDE OF NC-DOT ROAD OR CITY STREET, A SECOND VALVE IS REQUIRED 18" INSIDE PUBLIC R/W.
4. IF TAPPING VALVE IS LESS THAN 5-FEET FROM R/W (or EASEMENT) THEN SECOND VALVE AT R/W (or EASEMENT) IS NOT REQUIRED.

DETAIL: FORCE MAIN CONNECTION - PRIVATE TO PUBLIC		DETAIL NO: S-14
SCALE: NOT TO SCALE	CFPUA DETAIL DATE: 01/01/19	SHEET NO: -
CFPUA REV. No: 1		

CAPE FEAR PUBLIC UTILITY AUTHORITY
235 GOVERNMENT CENTER DRIVE
WILMINGTON, NC 28403
OFFICE: (910)332-6560
Stewardship. Sustainability. Service.

6 FORCE MAIN CONNECTION - PRIVATE TO PUBLIC SCALE: NTS

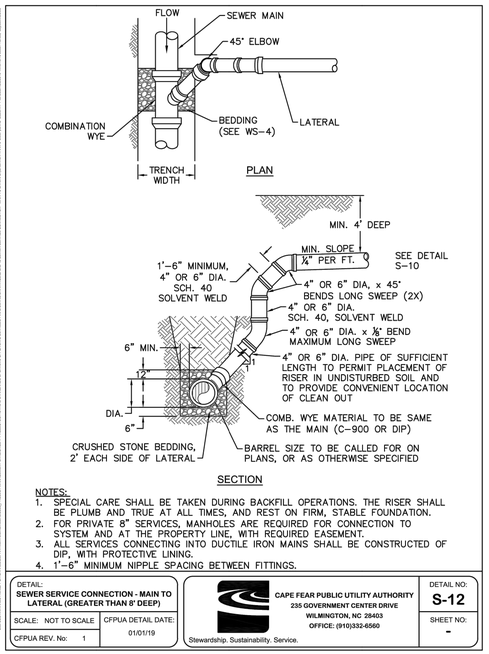

NOTES:

1. SPECIAL CARE SHALL BE TAKEN DURING BACKFILL OPERATIONS. THE RISER SHALL BE PLUMB AND TRUE AT ALL TIMES, AND REST ON FIRM, STABLE FOUNDATION.
2. FOR PRIVATE 8" SERVICES, MANHOLES ARE REQUIRED FOR CONNECTION TO SYSTEM AND AT THE PROPERTY LINE, WITH REQUIRED EASEMENT.
3. ALL SERVICES CONNECTING INTO DUCTILE IRON MAINS SHALL BE CONSTRUCTED OF DIP, WITH PROTECTIVE LINING.
4. 1'-6" MINIMUM NIPPLE SPACING BETWEEN FITTINGS.

DETAIL: SEWER SERVICE CONNECTION - MAIN TO LATERAL (GREATER THAN 8' DEEP)		DETAIL NO: S-12
SCALE: NOT TO SCALE	CFPUA DETAIL DATE: 01/01/19	SHEET NO: -
CFPUA REV. No: 1		

CAPE FEAR PUBLIC UTILITY AUTHORITY
235 GOVERNMENT CENTER DRIVE
WILMINGTON, NC 28403
OFFICE: (910)332-6560
Stewardship. Sustainability. Service.

4 SEWER SERVICE CONNECTION - MAIN TO LATERAL (> 8' DEEP) SCALE: NTS

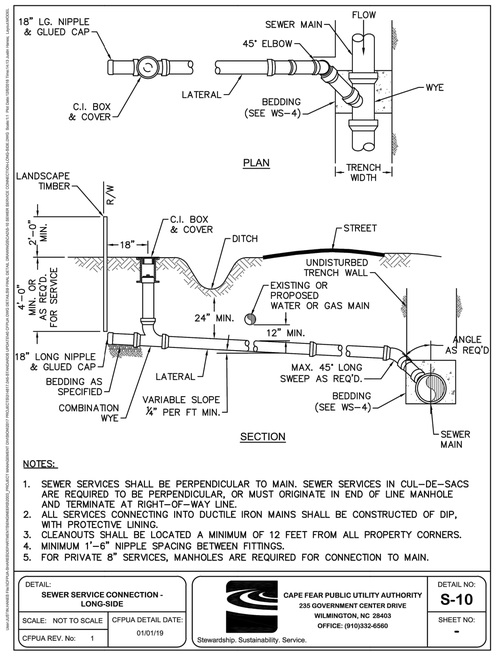

NOTES:

1. SEWER SERVICES SHALL BE PERPENDICULAR TO MAIN. SEWER SERVICES IN CUL-DE-SACS ARE REQUIRED TO BE PERPENDICULAR, OR MUST ORIGINATE IN END OF LINE MANHOLE AND TERMINATE AT RIGHT-OF-WAY LINE.
2. ALL SERVICES CONNECTING INTO DUCTILE IRON MAINS SHALL BE CONSTRUCTED OF DIP, WITH PROTECTIVE LINING.
3. CLEANOUTS SHALL BE LOCATED A MINIMUM OF 12 FEET FROM ALL PROPERTY CORNERS.
4. MINIMUM 1'-6" NIPPLE SPACING BETWEEN FITTINGS.
5. FOR PRIVATE 8" SERVICES, MANHOLES ARE REQUIRED FOR CONNECTION TO MAIN.

DETAIL: SEWER SERVICE CONNECTION - LONG-SIDE		DETAIL NO: S-10
SCALE: NOT TO SCALE	CFPUA DETAIL DATE: 01/01/19	SHEET NO: -
CFPUA REV. No: 1		

CAPE FEAR PUBLIC UTILITY AUTHORITY
235 GOVERNMENT CENTER DRIVE
WILMINGTON, NC 28403
OFFICE: (910)332-6560
Stewardship. Sustainability. Service.

2 SEWER SERVICE CONNECTION - LONG-SIDE SCALE: NTS

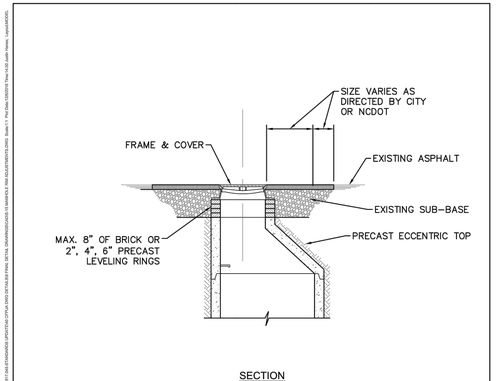

DETAIL: MANHOLE RIM ADJUSTMENTS		DETAIL NO: S-15
SCALE: NOT TO SCALE	CFPUA DETAIL DATE: 01/01/19	SHEET NO: -
CFPUA REV. No: 1		

CAPE FEAR PUBLIC UTILITY AUTHORITY
235 GOVERNMENT CENTER DRIVE
WILMINGTON, NC 28403
OFFICE: (910)332-6560
Stewardship. Sustainability. Service.

7 MANHOLE RIM ADJUSTMENTS SCALE: NTS

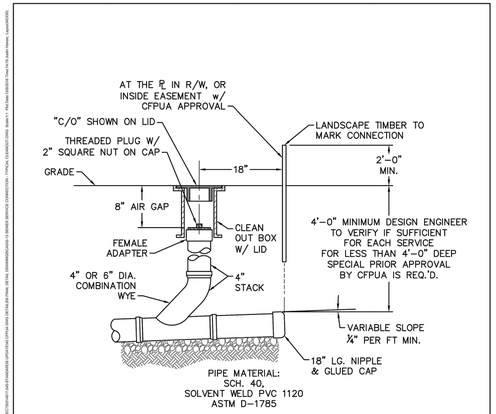

NOTES:

1. FOR PRIVATE 8" SERVICES, MANHOLES ARE REQUIRED FOR CONNECTION TO SYSTEM AND AT THE PROPERTY LINE, WITH REQUIRED EASEMENT.
2. CLEANOUTS SHALL BE LOCATED A MINIMUM OF 12 FEET FROM ALL PROPERTY CORNERS.

DETAIL: SEWER SERVICE CONNECTION - TYPICAL CLEAN-OUT		DETAIL NO: S-13
SCALE: NOT TO SCALE	CFPUA DETAIL DATE: 01/01/19	SHEET NO: -
CFPUA REV. No: 1		

CAPE FEAR PUBLIC UTILITY AUTHORITY
235 GOVERNMENT CENTER DRIVE
WILMINGTON, NC 28403
OFFICE: (910)332-6560
Stewardship. Sustainability. Service.

5 SEWER SERVICE CONNECTION - TYPICAL CLEAN-OUT SCALE: NTS

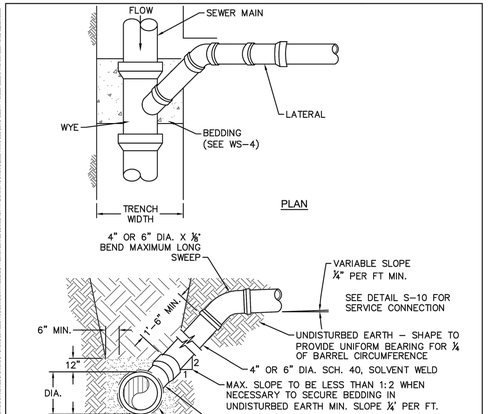

NOTES:

1. FOR PRIVATE 8" SERVICES, MANHOLES ARE REQUIRED FOR CONNECTION TO SYSTEM AND AT THE PROPERTY LINE, WITH REQUIRED EASEMENT.
2. ALL SERVICES CONNECTING INTO DUCTILE IRON MAINS SHALL BE CONSTRUCTED OF DIP, WITH PROTECTIVE LINING.

DETAIL: SEWER SERVICE CONNECTION - MAIN to LATERAL (LESS THAN 8' DEEP)		DETAIL NO: S-11
SCALE: NOT TO SCALE	CFPUA DETAIL DATE: 01/01/19	SHEET NO: -
CFPUA REV. No: 1		

CAPE FEAR PUBLIC UTILITY AUTHORITY
235 GOVERNMENT CENTER DRIVE
WILMINGTON, NC 28403
OFFICE: (910)332-6560
Stewardship. Sustainability. Service.

3 SEWER SERVICE CONNECTION- MAIN TO LATERAL (< 8' DEEP) SCALE: NTS

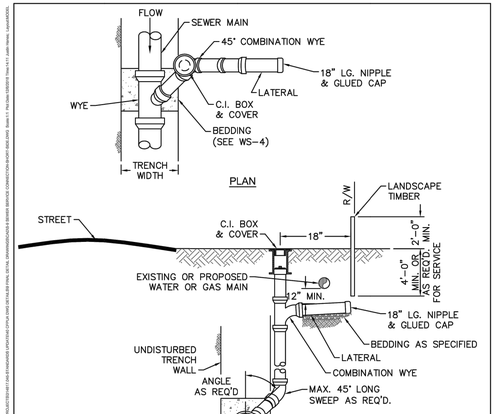

NOTES:

1. SEWER SERVICES SHALL BE PERPENDICULAR TO MAIN. SEWER SERVICES IN CUL-DE-SACS ARE REQUIRED TO BE PERPENDICULAR, OR MUST ORIGINATE IN END OF LINE MANHOLE AND TERMINATE AT RIGHT-OF-WAY LINE.
2. ALL SERVICES CONNECTING INTO DUCTILE IRON MAINS SHALL BE CONSTRUCTED OF DIP, WITH PROTECTIVE LINING.
3. CLEANOUTS SHALL BE LOCATED A MINIMUM OF 12 FEET FROM ALL PROPERTY CORNERS.
4. FOR PRIVATE 8" SERVICES, MANHOLES ARE REQUIRED FOR CONNECTION TO MAIN.

DETAIL: SEWER SERVICE CONNECTION - SHORT-SIDE		DETAIL NO: S-9
SCALE: NOT TO SCALE	CFPUA DETAIL DATE: 01/01/19	SHEET NO: -
CFPUA REV. No: 1		

CAPE FEAR PUBLIC UTILITY AUTHORITY
235 GOVERNMENT CENTER DRIVE
WILMINGTON, NC 28403
OFFICE: (910)332-6560
Stewardship. Sustainability. Service.

1 SEWER SERVICE CONNECTION - SHORT-SIDE SCALE: NTS

REV.NO.	DESCRIPTIONS	DATE
	REVISIONS	

SEAL

SEAL
NORTH CAROLINA PROFESSIONAL ENGINEER SEAL 025503 RICHARD A. MOORE
5/27/2020

McKIM&CREED
243 North Front Street
Wilmington, North Carolina 28401
Phone: (910)343-1048, Fax: (910)251-8282
License: F-1222
www.mckimcreed.com

D·R·HORTON® DHI Listed NYSE
America's Builder

SIDBURY FARMS
NEW HANOVER COUNTY, NORTH CAROLINA
CFPUA DETAILS

DATE:	02/12/2020
MCE PROJ. #	4245-0012
DRAWN	RAS/JEB
DESIGNED	RAS/JEB
CHECKED	RAM
PROJ. MGR.	RAM

SCALE
HORIZONTAL: N/A
VERTICAL: N/A

MAC FILE NUMBER CU-504
DRAWING NUMBER 56

STATUS: TRC SUBMITTAL
REVISION

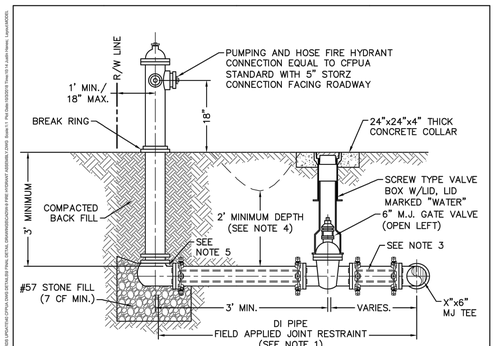

NOTES
1. JOINT RESTRAINT SYSTEMS SHALL BE WEDGE ACTION STYLE FOR DI.
2. WHEN HYDRANT LEGS REQUIRE FULL LENGTH PIPE SECTIONS, OVER BELL RESTRAINT SYSTEM SHALL HAVE 316 STAINLESS STEEL HARNESS AND FASTENERS.
3. CONTINUOUS 316 STAINLESS STEEL RODS (TEE TO VALVE AND VALVE TO HYDRANT) MAY BE USED WITH COR-BLUE MJ T-BOLT AND GASKET KITS, AS AN ALTERNATIVE.
4. HYDRANT AND VALVE SHALL BE PLACED OUTSIDE DITCH LIMITS.
5. WEEP HOLES OPEN AND UNBLOCKED TO DRAIN.
6. MJ TEE SHALL BE RESTRAINED ON EACH SIDE OF MAIN PLUS MAIN VALVES, FITTING, OR JOINTS WITHIN 10-FEET OF MJ TEE.
7. TRACING WIRE SHALL EXTEND ALONG HYDRANT LATERAL AND UP TO FINISHED GRADE WITH 2-FEET EXTENDED ABOVE THE BREAK RING OF HYDRANT.

DETAIL: FIRE HYDRANT ASSEMBLY		CAPE FEAR PUBLIC UTILITY AUTHORITY 235 GOVERNMENT CENTER DRIVE WILMINGTON, NC 28403 OFFICE: (910)332-6560 Stewardship. Sustainability. Service.	DETAIL NO: W-9
SCALE: NOT TO SCALE	CFPUA DETAIL DATE: 01/01/19		SHEET NO: -
CFPUA REV. No: 1			

8 FIRE HYDRANT ASSEMBLY SCALE: NTS

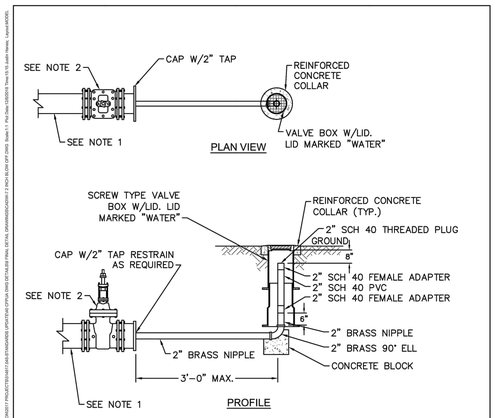

NOTES:
1. PROVIDE TOTAL LENGTH OF RESTRAINED JOINTS UPSTREAM AS REQUIRED FOR MAIN DIAMETER AT 150 psi TEST PRESSURE. WHEN UPSTREAM BENDS ARE WITHIN THE DEAD LENGTH, ADD TOTAL BEND RESTRAINT FOR EACH BEND TO DEAD-IN LENGTH.
2. IF MAIN IS LARGER THAN 2", END WITH A VALVE SIZED FOR THE MAIN, THREADED CAP SIZED ON VALVE FOR THE 2" BLOW-OFF.

DETAIL: 2 INCH BLOW-OFF		CAPE FEAR PUBLIC UTILITY AUTHORITY 235 GOVERNMENT CENTER DRIVE WILMINGTON, NC 28403 OFFICE: (910)332-6560 Stewardship. Sustainability. Service.	DETAIL NO: W-7
SCALE: NOT TO SCALE	CFPUA DETAIL DATE: 01/01/19		SHEET NO: -
CFPUA REV. No: 1			

6 2-INCH BLOW-OFF SCALE: NTS

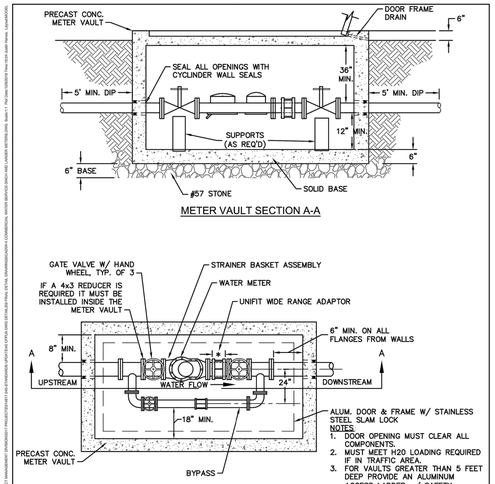

NOTES
1. DOOR OPENING MUST CLEAR ALL COMPONENTS.
2. MUST MEET H20 LOADING REQUIRED IF IN TRAFFIC AREA.
3. FOR VAULTS GREATER THAN 5 FEET DEEP PROVIDE AN ALUMINUM ACCESS LADDER w/ SAFETY EXTENSION AND NON-SKID RUNGS @ 12" o/c ANCHORED TO THE WALL.

Meter Size	By-Pass Size
3"	4"
4"	4"
6"	4"
8"	4"
10"	6"
12"	8"

* FLANGED COUPLING ADAPTER IS BOLTED DIRECTLY TO METER, ONLY ONE PE/FLG PIECE THAT IS 3 TIMES THE PIPE DIAMETER.

DETAIL: COMMERCIAL WATER SERVICE - 3-INCH AND LARGER METERS		CAPE FEAR PUBLIC UTILITY AUTHORITY 235 GOVERNMENT CENTER DRIVE WILMINGTON, NC 28403 OFFICE: (910)332-6560 Stewardship. Sustainability. Service.	DETAIL NO: W-4
SCALE: NOT TO SCALE	CFPUA DETAIL DATE: 01/01/19		SHEET NO: -
CFPUA REV. No: 1			

4 COMMERCAIL WATER SERVICE - 3-INCH AND LARGER METERS SCALE: NTS

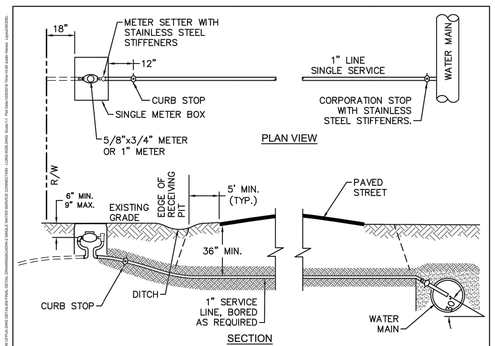

NOTES:
1. NO JOINT SHALL BE INSTALLED BETWEEN THE MAIN SERVICE TAP AND THE METER STOP. ALL SERVICES SHALL BE INSTALLED PERPENDICULAR TO MAIN.
2. SERVICE SADDLES ON PVC MAINS SHALL BE WIDE BAND BRASS BODY.
3. METER BOXES SUBJECT TO TRAFFIC LOADS SHALL CONFORM TO ASTM A48, CLASS 30B AND AASHTO H20 LOAD RATING STANDARDS
4. WATER SERVICE LINE SHALL BE PERPENDICULAR TO MAIN AND TERMINATE 18" WITHIN RIGHT-OF-WAY LINE.
5. WATER METER BOXES ARE TO BE A MINIMUM OF 5 FEET FROM THE PROPERTY CORNER.
6. SERVICE PIPING AND METER SETTER TO BE CENTERED IN THE METER BOX.

DETAIL: SINGLE WATER SERVICE CONNECTION - LONG-SIDE		CAPE FEAR PUBLIC UTILITY AUTHORITY 235 GOVERNMENT CENTER DRIVE WILMINGTON, NC 28403 OFFICE: (910)332-6560 Stewardship. Sustainability. Service.	DETAIL NO: W-2
SCALE: NOT TO SCALE	CFPUA DETAIL DATE: 01/01/19		SHEET NO: -
CFPUA REV. No: 1			

2 SINGLE WATER SERVICE CONNECTION - LONG-SIDE SCALE: NTS

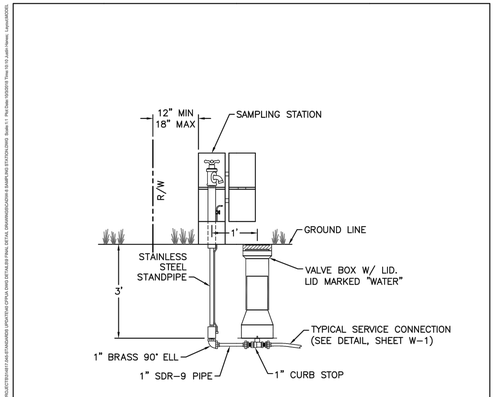

DETAIL: SAMPLING STATION		CAPE FEAR PUBLIC UTILITY AUTHORITY 235 GOVERNMENT CENTER DRIVE WILMINGTON, NC 28403 OFFICE: (910)332-6560 Stewardship. Sustainability. Service.	DETAIL NO: W-8
SCALE: NOT TO SCALE	CFPUA DETAIL DATE: 01/01/19		SHEET NO: -
CFPUA REV. No: 1			

7 SAMPLING STATION SCALE: NTS

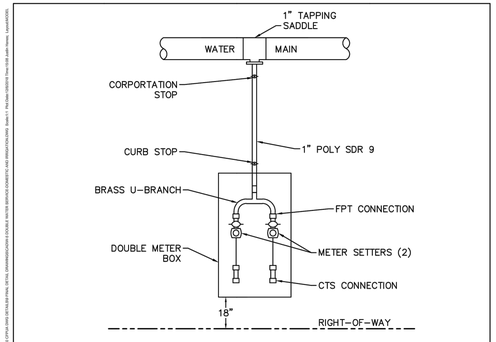

NOTES:
1. ALL WATER SERVICES SHALL BE INSTALLED PERPENDICULAR TO MAIN AND TERMINATE 18" INSIDE THE RIGHT OF WAY.
2. WATER SERVICE SADDLES ON PVC MAINS SHALL BE WIDE BAND BRASS BODY.
3. METER BOXES SUBJECT TO TRAFFIC SHALL CONFORM TO ASTM A48, CLASS 30B AND AASHTO H20 LOAD RATING STANDARDS.
4. 3" CLEAN FILL REQUIRED ALL AROUND 1" POLY SERVICE LINE.
5. JOINT RESTRAINT SYSTEMS SHALL BE WEDGE ACTION STYLE FOR DI OR C-900 PVC PIPE.
6. METER BOXES SHALL BE LOCATED MINIMUM 5-FEET FROM THE PROPERTY CORNER.
7. ASSEMBLY TO BE CENTERED IN THE METER BOX.

DETAIL: DOUBLE WATER SERVICE - DOMESTIC AND IRRIGATION SPLIT		CAPE FEAR PUBLIC UTILITY AUTHORITY 235 GOVERNMENT CENTER DRIVE WILMINGTON, NC 28403 OFFICE: (910)332-6560 Stewardship. Sustainability. Service.	DETAIL NO: W-5
SCALE: NOT TO SCALE	CFPUA DETAIL DATE: 01/01/19		SHEET NO: -
CFPUA REV. No: 1			

5 DOUBLE WATER SERVICE - DOMESTIC AND IRRIGATION SPLIT SCALE: NTS

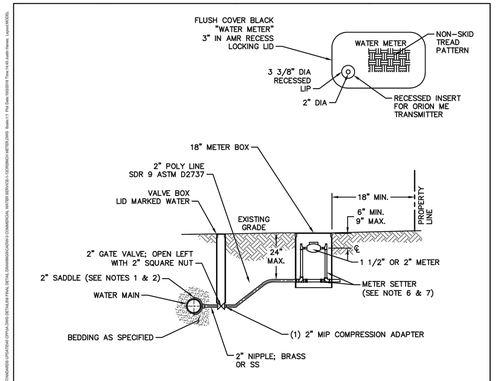

NOTES:
1. WATER SERVICES SHALL BE INSTALLED PERPENDICULAR TO MAIN AND TERMINATE 18" INSIDE THE RIGHT-OF-WAY LINE.
2. SERVICE SADDLES ON PVC MAINS SHALL BE WIDE BAND BRASS BODY.
3. METER BOXES SUSCEPTIBLE TO TRAFFIC SHALL CONFORM TO ASTM A48, CLASS 30B AND AASHTO H20 LOAD RATING STANDARDS.
4. NON-TRAFFIC METER BOXES SHALL BE PER CFPUA STANDARD MATERIAL.
5. 3" CLEAN FILL REQUIRED ALL AROUND 2" POLY SERVICE LINE.
6. 1 1/2" METER - NL METER SETTER SHALL BE PER CFPUA STANDARD MATERIAL.
7. 2" METER - NL METER SETTER SHALL BE PER CFPUA STANDARD MATERIAL.
8. WATER METER BOXES ARE TO BE A MINIMUM OF 5 FEET FROM THE PROPERTY CORNERS.
9. SERVICE PIPING AND METER SETTER TO BE CENTERED IN THE METER BOX.

DETAIL: COMMERCIAL WATER SERVICE - 1 1/2 OR 2-INCH METERS		CAPE FEAR PUBLIC UTILITY AUTHORITY 235 GOVERNMENT CENTER DRIVE WILMINGTON, NC 28403 OFFICE: (910)332-6560 Stewardship. Sustainability. Service.	DETAIL NO: W-3
SCALE: NOT TO SCALE	CFPUA DETAIL DATE: 01/01/19		SHEET NO: -
CFPUA REV. No: 1			

3 COMMERCIAL WATER SERVICE - 1 1/2 OR 2-INCH METERS SCALE: NTS

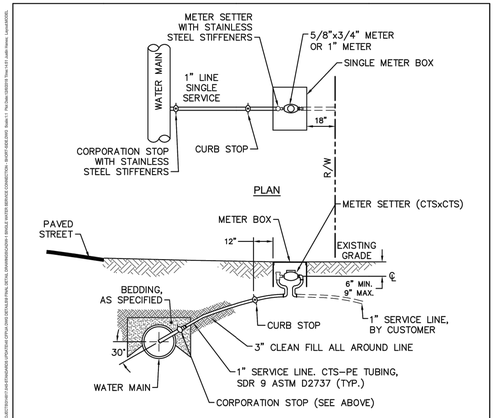

NOTES:
1. NO JOINT SHALL BE INSTALLED BETWEEN THE MAIN SERVICE TAP AND THE METER STOP. ALL SERVICES SHALL BE INSTALLED PERPENDICULAR TO MAIN.
2. SERVICE SADDLES ON PVC MAINS SHALL BE WIDE BAND BRASS BODY.
3. METER BOXES SUBJECT TO TRAFFIC LOADS SHALL CONFORM TO ASTM A48, CLASS 30B AND AASHTO H20 LOAD RATING STANDARDS.
4. WATER SERVICE LINE SHALL TERMINATE 18" WITHIN RIGHT-OF-WAY LINE.
5. WATER METER BOXES ARE TO BE A MINIMUM OF 5 FEET FROM THE PROPERTY CORNER.
6. SERVICE PIPING AND METER SETTER TO BE CENTERED IN THE METER BOX.

DETAIL: SINGLE WATER SERVICE CONNECTION - TYPICAL SHORT-SIDE CONNECTION		CAPE FEAR PUBLIC UTILITY AUTHORITY 235 GOVERNMENT CENTER DRIVE WILMINGTON, NC 28403 OFFICE: (910)332-6560 Stewardship. Sustainability. Service.	DETAIL NO: W-1
SCALE: NOT TO SCALE	CFPUA DETAIL DATE: 01/01/19		SHEET NO: -
CFPUA REV. No: 1			

1 SINGLE WATER SERVICE CONNECTION - TYPICAL SHORT-SIDE SCALE: NTS

REV.NO.	DESCRIPTIONS	DATE
	REVISIONS	

SEAL

SEAL
NORTH CAROLINA PROFESSIONAL ENGINEER SEAL 025503 RICHARD A. MOORE
5/27/2020

McKIM&CREED
243 North Front Street
Wilmington, North Carolina 28401
Phone: (910)343-1048, Fax: (910)251-8282
License: F-1222
www.mckimcreed.com

D·R·HORTON® DHI Listed NYSE America's Builder

SIDBURY FARMS

NEW HANOVER COUNTY, NORTH CAROLINA

CFPUA DETAILS

DATE:	02/12/2020
MCE PROJ. #	4245-0012
DRAWN	RAS/JEB
DESIGNED	RAS/JEB
CHECKED	RAM
PROJ. MGR.	RAM

SCALE
HORIZONTAL: N/A
VERTICAL: N/A

MAC FILE NUMBER CU-505
DRAWING NUMBER 57

STATUS: TRC SUBMITTAL REVISION

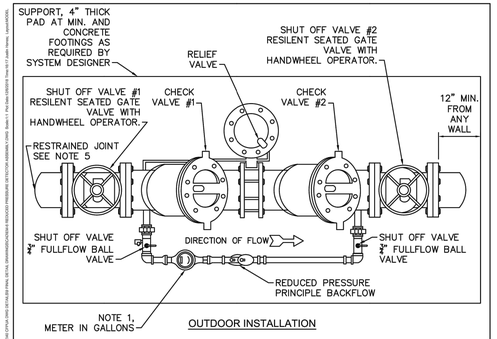

OUTDOOR INSTALLATION

NOTES:
1. FIRE SERVICE BACKFLOW ASSEMBLIES MUST BE CFPUA APPROVED.
2. ABOVE GROUND REDUCED PRESSURE DETECTOR ASSEMBLIES (RPDA) PER CFPUA STANDARDS.
3. 4"–10" RPDA SHALL BE SUPPORTED WITH ADEQUATE SUPPORT PEDESTAL(S).
4. OUTDOOR INSTALLATION SHALL HAVE A PROTECTIVE ENCLOSURE PER CFPUA STANDARDS.
5. MAIN LINE 2 1/2" TO 3" BRASS, K–COPPER OR GALVANIZED PIPE, 4" TO 10" DIP. RESTRAINED JOINTS SHALL BE FLANGED OR APPROVED EQUAL.
6. CFPUA APPROVED 2 1/2" – 10" RPDA INCLUDES SHUT OFF VALVES #1 AND #2. AS PART OF THE ASSEMBLY. NO SUBSTITUTIONS SHALL BE PERMITTED.
7. TEST COCK #1 SHALL BE UPSTREAM OF SHUT OFF VALVE #1 AND IS PART OF THE APPROVED ASSEMBLY.
8. MUST COMPLETE CFPUA'S BACKFLOW INSTALLATION FORM. CONTACT COMMUNITY COMPLIANCE AT 910–332–6558 OR EMAIL COMMUNITY.COMPLIANCE@CFPUA.ORG.
9. ONLY IN–LINE TESTABLE ASSEMBLIES APPROVED BY THE USC FOUNDATION FOR CROSS CONNECTION CONTROL OR ASSE SHALL BE ACCEPTED.

DETAIL: FIRE SERVICE REDUCED PRESSURE DETECTOR ASSEMBLY		DETAIL NO: EM-6
SCALE: NOT TO SCALE	CFPUA DETAIL DATE: 01/01/19	SHEET NO: -
CFPUA REV. No: 1		

CAPE FEAR PUBLIC UTILITY AUTHORITY
235 GOVERNMENT CENTER DRIVE
WILMINGTON, NC 28403
OFFICE: (910)332-6560
Stewardship. Sustainability. Service.

6 FIRE SERVICE REDUCED PRESSURE DETECTOR ASSEMBLY SCALE: NTS

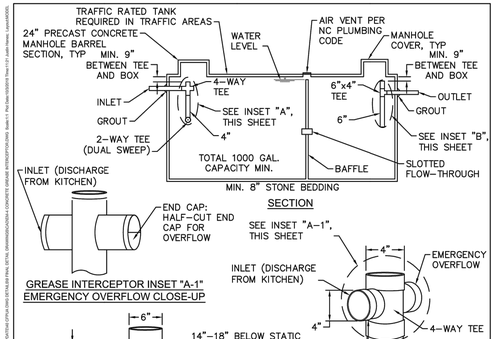

GREASE INTERCEPTOR INSET "A-1" EMERGENCY OVERFLOW CLOSE-UP

GREASE INTERCEPTOR INSET "B" 6" x 6" x 4" OUTLET SANITARY TEE

GREASE INTERCEPTOR INSET "A" 4" SANITARY TEE

NOTES:
1. MUST COMPLETE CFPUA'S APPLICATION FOR AUTHORIZATION TO CONSTRUCT. CONTACT COMMUNITY COMPLIANCE AT 910–332–6558 OR COMMUNITY.COMPLIANCE@CFPUA.ORG.
2. SHALL BE SIZED TO ACHIEVE A MINIMUM 20 MINUTE DETENTION TIME.
3. ALL FIXTURES AND DRAINS RECEIVING GREASE LADEN SOURCES FROM KITCHEN OR FOOD PREPARATION WASTE WATER SHALL PASS THROUGH THE GREASE INTERCEPTOR.

DETAIL: CONCRETE GREASE INTERCEPTOR		DETAIL NO: EM-4
SCALE: NOT TO SCALE	CFPUA DETAIL DATE: 01/01/19	SHEET NO: -
CFPUA REV. No: 1		

CAPE FEAR PUBLIC UTILITY AUTHORITY
235 GOVERNMENT CENTER DRIVE
WILMINGTON, NC 28403
OFFICE: (910)332-6560
Stewardship. Sustainability. Service.

4 CONCRETE GREASE INTERCEPTOR SCALE: NTS

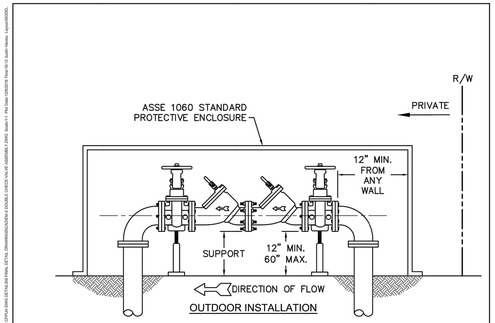

OUTDOOR INSTALLATION

NOTES:
1. MUST BE MIN. 36" AWAY FROM ANY ELECTRICAL PANEL.
2. VALVE REQUIRED DOWNSTREAM OF BACKFLOW ASSEMBLY.
3. VERTICAL INSTALLATION SHALL BE DESIGNED AND SUBMITTED TO CFPUA EMD FOR APPROVAL.
4. LOCATE AS CLOSE TO THE RIGHT–OF–WAY AS POSSIBLE.
5. INDOOR INSTALLATIONS MUST BE APPROVED BY CFPUA.
6. MUST COMPLETE CFPUA'S BACKFLOW INSTALLATION FORM. CONTACT COMMUNITY COMPLIANCE AT 910–332–6558 OR COMMUNITY.COMPLIANCE@CFPUA.ORG.
7. ONLY IN–LINE TESTABLE ASSEMBLIES APPROVED BY THE USC FOUNDATION FOR CROSS CONNECTION CONTROL OR ASSE SHALL BE ACCEPTED.

DETAIL: DOUBLE CHECK VALVE ASSEMBLY		DETAIL NO: EM-2
SCALE: NOT TO SCALE	CFPUA DETAIL DATE: 01/01/19	SHEET NO: -
CFPUA REV. No: 1		

CAPE FEAR PUBLIC UTILITY AUTHORITY
235 GOVERNMENT CENTER DRIVE
WILMINGTON, NC 28403
OFFICE: (910)332-6560
Stewardship. Sustainability. Service.

2 DOUBLE CHECK VALVE ASSEMBLY SCALE: NTS

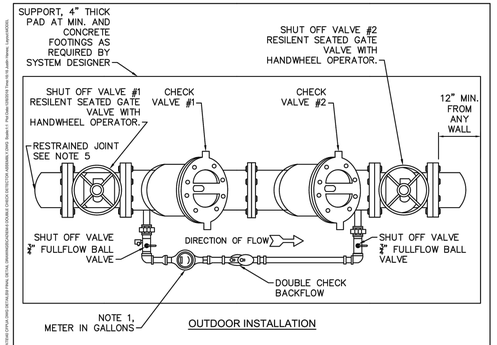

OUTDOOR INSTALLATION

NOTES:
1. FIRE SERVICE BACKFLOW ASSEMBLIES MUST BE CFPUA APPROVED.
2. ABOVE GROUND DOUBLE CHECK DETECTOR ASSEMBLIES (DCDA) PER CFPUA STANDARDS.
3. 4"–10" DCDA SHALL BE SUPPORTED WITH ADEQUATE SUPPORT PEDESTAL(S).
4. OUTDOOR INSTALLATION SHALL HAVE A PROTECTIVE ENCLOSURE PER CFPUA STANDARDS.
5. MAIN LINE 3" BRASS, K–COPPER OR GALVANIZED PIPE, 4" TO 10" DIP. RESTRAINED JOINTS SHALL BE FLANGED OR APPROVED EQUAL.
6. CFPUA APPROVED 3" – 10" DCDA INCLUDES SHUT OFF VALVES #1 AND #2. AS PART OF THE ASSEMBLY. NO SUBSTITUTIONS SHALL BE PERMITTED.
7. TEST COCK #1 SHALL BE UPSTREAM OF SHUT OFF VALVE #1 AND IS PART OF THE APPROVED ASSEMBLY.
8. MUST COMPLETE CFPUA'S BACKFLOW INSTALLATION FORM. CONTACT COMMUNITY COMPLIANCE AT 910–332–6558 OR EMAIL COMMUNITY.COMPLIANCE@CFPUA.ORG.
9. ONLY IN–LINE TESTABLE ASSEMBLIES APPROVED BY THE USC FOUNDATION FOR CROSS CONNECTION CONTROL OR ASSE SHALL BE ACCEPTED.

DETAIL: FIRE SERVICE DOUBLE CHECK DETECTOR ASSEMBLY		DETAIL NO: EM-5
SCALE: NOT TO SCALE	CFPUA DETAIL DATE: 01/01/19	SHEET NO: -
CFPUA REV. No: 1		

CAPE FEAR PUBLIC UTILITY AUTHORITY
235 GOVERNMENT CENTER DRIVE
WILMINGTON, NC 28403
OFFICE: (910)332-6560
Stewardship. Sustainability. Service.

5 FIRE SERVICE DOUBLE CHECK DETECTOR ASSEMBLY SCALE: NTS

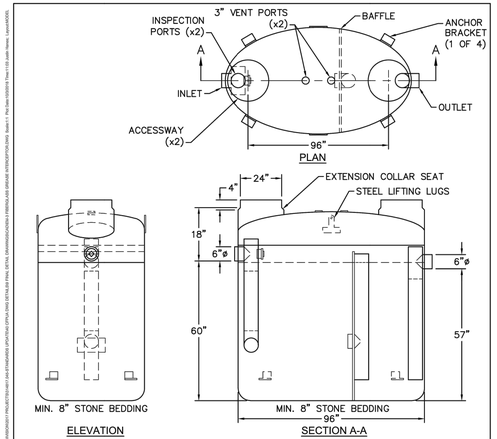

ELEVATION

SECTION A-A

NOTES:
1. FOR GRAVITY APPLICATIONS ONLY.
2. MIN. THICKNESS: 1/4" WALL AND 3/8" TOP AND BOTTOM BOWLS.
3. STANDARD PIPE STUBS ARE SOCKET SDR 35 PVC.
4. EXTENSION COLLARS SHALL BE CAULKED WITH SIKAFLEX OR EQUIVALENT FOR WATERTIGHT SEAL.
5. FOLLOW MANUFACTURE'S SPECS FOR TRAFFIC OR PEDESTRIAN LOADING.
6. MUST COMPLETE CFPUA'S APPLICATION FOR AUTHORIZATION TO CONSTRUCT. CONTACT COMMUNITY COMPLIANCE AT 910–332–6558 OR COMMUNITY.COMPLIANCE@CFPUA.ORG.
7. SHALL BE SIZED TO ACHIEVE A MINIMUM 20 MINUTE DETENTION TIME.
8. ALL FIXTURES AND DRAINS RECEIVING GREASE LADEN SOURCES FROM KITCHEN OR FOOD PREPARATION WASTE WATER SHALL PASS THROUGH THE GREASE INTERCEPTOR.

DETAIL: FIBREGLASS GREASE INTERCEPTOR		DETAIL NO: EM-3
SCALE: NOT TO SCALE	CFPUA DETAIL DATE: 01/01/19	SHEET NO: -
CFPUA REV. No: 1		

CAPE FEAR PUBLIC UTILITY AUTHORITY
235 GOVERNMENT CENTER DRIVE
WILMINGTON, NC 28403
OFFICE: (910)332-6560
Stewardship. Sustainability. Service.

3 FIBREGLASS GREASE INTERCEPTOR SCALE: NTS

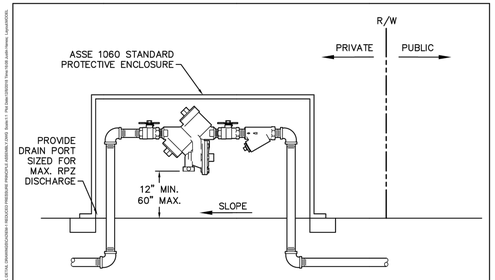

NOTES:
1. MUST BE MIN. 36" AWAY FROM ANY ELECTRICAL PANEL.
2. VALVE REQUIRED DOWNSTREAM OF BACKFLOW ASSEMBLY.
3. VERTICAL INSTALLATION SHALL BE DESIGNED AND SUBMITTED TO CFPUA EMD FOR APPROVAL.
4. LOCATE AS NEAR TO RIGHT–OF–WAY AS POSSIBLE.
5. MUST COMPLETE CFPUA'S BACKFLOW INSTALLATION FORM. CONTACT COMMUNITY COMPLIANCE AT 910–332–6558 OR COMMUNITY.COMPLIANCE@CFPUA.ORG.
6. ONLY IN–LINE TESTABLE ASSEMBLIES APPROVED BY THE USC FOUNDATION FOR CROSS CONNECTION CONTROL OR ASSE SHALL BE ACCEPTED.

OUTDOOR HORIZONTAL INSTALLATION

DETAIL: REDUCED PRESSURE PRINCIPLE ASSEMBLY		DETAIL NO: EM-1
SCALE: NOT TO SCALE	CFPUA DETAIL DATE: 01/01/19	SHEET NO: -
CFPUA REV. No: 1		

CAPE FEAR PUBLIC UTILITY AUTHORITY
235 GOVERNMENT CENTER DRIVE
WILMINGTON, NC 28403
OFFICE: (910)332-6560
Stewardship. Sustainability. Service.

1 REDUCED PRESSIRE PRINCIPLE ASSEMBLY SCALE: NTS

REV.NO.	DESCRIPTIONS	DATE
	REVISIONS	

SEAL

SEAL
NORTH CAROLINA PROFESSIONAL ENGINEER SEAL 025503 RICHARD A. MOORE
5/27/2020

McKIM&CREED
243 North Front Street
Wilmington, North Carolina 28401
Phone: (910)343–1048, Fax: (910)251–8282
License: F–1222
www.mckimcreed.com

D·R·HORTON® DHI Listed NYSE
America's Builder

SIDBURY FARMS
NEW HANOVER COUNTY, NORTH CAROLINA
CFPUA DETAILS

DATE:	02/12/2020
MCE PROJ. #	4245–0012
DRAWN	RAS/JEB
DESIGNED	RAS/JEB
CHECKED	RAM
PROJ. MGR.	RAM

SCALE
HORIZONTAL: N/A
VERTICAL: N/A

M&C FILE NUMBER CU-506
DRAWING NUMBER 58

STATUS: TRC SUBMITTAL
REVISION

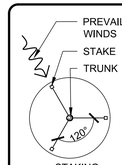

STAKING PLAN

GENERAL NOTES:
A. TREE TO BE STRAIGHTENED PRIOR TO BACKFILL AND GUYING
B. SCARIFY BOTTOM AND SIDES OF PLANT PIT.
C. STAKE AND GUY TREES 3" CALIPER OR GREATER, OR TREES IN WINDING LOCATIONS AS DIRECTED BY LANDSCAPE ARCHITECT.
D. DO NOT WRAP TREE TRUNK.
E. MARK NORTH SIDE OF TREE AT NURSERY AND PLANT WITH MARKING FACING NORTH.
F. BACKFILL PLANTING PITS WITH TOPSOIL MIXTURE AS SPECIFIED, PACK SOIL AROUND BASE OF ROOTBALL TO STABILIZE, INSTALL REMAINDER IN 9" LAYERS, HAND TAMP TO REMOVE VOIDS AND WATER EACH LAYER

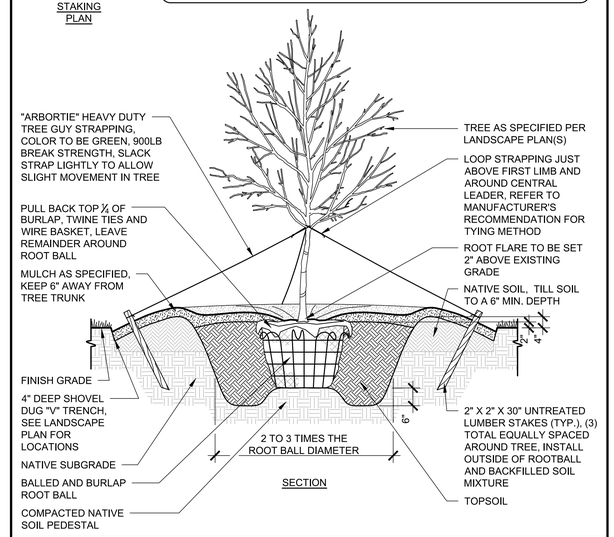

SECTION

2 TYPICAL TREE PLANTING — SCALE: NTS

A. ALL EXISTING VEGETATION THAT IS USED TO MEET LANDSCAPING REQUIREMENTS, ALL REQUIRED PLANTED LIVING MATERIAL, AND ALL REQUIRED BERMS SHALL BE MAINTAINED BY THE OWNER OF THE PROPERTY ON A CONTINUING BASIS. ANY PLANTED MATERIAL WHICH BECOMES DAMAGED OR DISEASED OR DIES SHALL BE REPLACED BY THE OWNER WITHIN 60 DAYS OF THE OCCURRENCE OF SUCH CONDITION. IF, IN THE OPINION OF THE ZONING ADMINISTRATOR THERE ARE SEASONAL CONDITIONS WHICH WILL NOT PERMIT THE TIMELY REPLACEMENT OF THE VEGETATION (E.G. TOO HOT OR TOO COOL FOR SUCCESSFUL REPLANTING) THIS REQUIREMENT MAY BE ADMINISTRATIVELY WAIVED UNTIL A TIME CERTAIN WHEN THE REPLANTING WOULD BE SUCCESSFUL.

B. VERIFICATION OF TOTAL LANDSCAPE MATERIAL QUANTITIES AS SHOWN ON THE LANDSCAPE PLANS AND IN THE PLANT LIST SHALL BE THE RESPONSIBILITY OF THE LANDSCAPE CONTRACTOR. THE LANDSCAPE ARCHITECT SHALL BE NOTIFIED OF ANY DISCREPANCIES PRIOR TO FINAL BIDDING OR INSTALLATION.

C. ALL PLANTING TYPES SHALL COMPLY WITH LOCAL GOVERNING CODES AND REGULATIONS, CONFORM TO REQUIREMENTS OF PLANT LIST AND TO THE AMERICAN ASSOCIATION OF NURSERYMEN "AMERICAN STANDARD OF NURSERY STOCK" AND "HORTICULTURAL STANDARDS" AS TO SPECIES, AGE, SIZE, AND PLANTING RECOMMENDATIONS.

D. LANDSCAPE MATERIAL PLACED IN PREPARED HOLES SHALL BE PROPERLY BACKFILLED PRIOR TO THE END OF THE WORKING DAY.

E. ALL SAUCERS SHALL BE SOAKED WITH WATER AND MULCHED IMMEDIATELY FOLLOWING INSTALLATION.

F. ALL PREPARED GROUND COVER AND ANNUAL BED INSTALLATIONS SHALL BE PROPERLY SOAKED AND MULCHED PRIOR TO THE END OF THE DAY.

G. LANDSCAPE ARCHITECT SHALL APPROVE ANY ON-SITE PLANT STORAGE AREA FOR ACCESSIBILITY, SHADE CONDITIONS, HEALING-IN MULCH MATERIAL AND TEMPORARY WATERING METHODS.

H. ALL ROPE AND WRAPPING TWINE SHALL BE CUT AND REMOVED FROM AROUND THE UPPER PARTS OF THE ROOT BALL. METAL BASKET WIRES AND BURLAP SHALL BE PULLED BACK AND TUCKED UNDER THE EDGES OF THE SAUCER RINGS ON ALL TREES AND LARGE SHRUBS. ALL SYNTHETIC BURLAP SHALL BE REMOVED FROM PLANT BALLS PRIOR TO BACK FILLING.

I. ALL PLANT BEDS OR RAISED SAUCER RINGS SHALL BE EDGED WITH SMOOTH, CONTINUOUS CURVES.

J. ALL PLANT MATERIAL SHALL BE PLANTED AT HEIGHTS AND WIDTHS AS ILLUSTRATED IN PLANTING DETAILS.

K. TREE GUYING SHALL BE PERFORMED WITHIN A WEEK OF PLANTING. THE LANDSCAPE CONTRACTOR SHALL BE RESPONSIBLE FOR REMOVING ALL TREE GUYING STRAPPING AND STAKES AFTER THE FIRST FULL GROWING SEASON OR ONE YEAR, WHICH EVER COMES FIRST.

L. CONTRACTOR SHALL VERIFY LOCATIONS OF UNDERGROUND UTILITIES PRIOR TO PLANTING.

M. ANY EXPOSED OR UNCOVERED LINES SHALL BE SHOWN TO GENERAL CONTRACTOR PRIOR TO BACKFILLING.

N. ALL PLANT BEDS AND RAISED SAUCER RINGS SHALL BE GRADED TO PROVIDE ADEQUATE DRAINAGE AND SHALL BE MULCHED AS SPECIFIED.

O. ALL MATERIALS, PLANTING AND LANDSCAPE WORK SHALL CONFORM TO THE CURRENT MUNICIPAL AUTHORITIES STANDARD SPECIFICATIONS AND DETAILS.

P. ALL LANDSCAPE AREAS THAT ARE NOT PLANTED AND MULCHED OR PAVED SHALL BE SEEDED OR SODDED.

Q. FIRST YEAR PRUNING OF TREE CROWN SHALL BE LIMITED TO REMOVAL OF DEAD & DAMAGED WOOD.

R. TREE PROTECTION FENCE SHALL BE INSTALLED, INSPECTED AND APPROVED PRIOR TO CLEARING, GRADING AND CONSTRUCTION ACTIVITY OR ISSUANCE OF ANY RELATED PERMITS. NO CONSTRUCTION WORKERS, TOOLS, MATERIALS OR VEHICLES ARE PERMITTED WITHIN THE TREE PROTECTION FENCING.

S. MULCH LINE TO BE CONSTRUCTED OF SMOOTH CONTINUOUS CURVES. CLEAR OUT FIRST 5' FROM DEBRIS AND UNDERBRUSH AT AREAS OF EXISTING VEGETATION TO REMAIN.

T. ALL TREES NOT WITHIN A PLANT BED TO BE TREATED WITH A 6' DIAMETER MULCH RING TYPICAL, UNLESS OTHERWISE INDICATED ON THE PLANTING PLANS.

U. ALL TREES TO HAVE A MINIMUM 2" CALIPER AT THE TIME OF PLANTING, UNLESS OTHERWISE INDICATED IN THE PLANTING SPECIFICATION. CALIPER TO BE MEASURED 48" ABOVE THE ROOT BALL.

V. TREES SHALL BE LOCATED A MINIMUM OF 5 FEET FROM SEWER/WATER CONNECTIONS OR AS OTHERWISE DICTATED BY LOCAL REGULATIONS. CONTRACTOR SHALL BE LIABLE FOR DAMAGE TO ANY AND ALL PUBLIC OR PRIVATE UTILITIES.

W. SUBSTITUTIONS OF PLANT MATERIALS SPECIFIED CAN ONLY OCCUR WITH PRIOR APPROVAL BY LANDSCAPE ARCHITECT.

X. AREAS DAMAGED BY ACTIVITIES OF CONTRACTOR SHALL BE RE-ESTABLISHED TO PRE-DISTURBANCE CONDITION AT NO ADDITIONAL COST TO THE OWNER.

Y. USE HERBICIDES, PESTICIDES, AND FERTILIZER IN A MANNER CONSISTENT WITH THE FEDERAL INSECTICIDE, FUNGICIDE, AND RODENTICIDE ACT AND IN ACCORDANCE WITH LABEL RESTRICTIONS.

Z. CONTRACTOR SHALL INSURE THAT ALL PLANT MATERIAL IS FREE OF FIRE ANTS PRIOR TO INSTALLATION.

3 GENERAL LANDSCAPE NOTES — SCALE: NTS

PLANT SCHEDULE PHASE 1

TREES	SIZE	CALIPER	HEIGHT	QTY	REMARKS
QUERCUS PHELLOS WILLOW OAK	B & B	2" CAL.	12`-14` HT.	94	SINGLE DOMINANT LEADER, UNIFORM CANOPY & MATCHED
QUERCUS SHUMARDII SHUMARD RED OAK	B & B	2" CAL.	12`-14` HT.	25	SINGLE DOMINANT LEADER, UNIFORM CANOPY & MATCHED
QUERCUS VIRGINIANA SOUTHERN LIVE OAK	B & B	2" CAL.	12`-14` HT.	104	SINGLE DOMINANT LEADER, UNIFORM CANOPY & MATCHED
ULMUS PARVIFOLIA `ALLEE` ALLEE LACEBARK ELM	B & B	2" CAL.	12`-14` HT.	69	SINGLE DOMINANT LEADER, UNIFORM CANOPY & MATCHED
ZELKOVA SERRATA `VILLAGE GREEN` SAWLEAF ZELKOVA	B & B	2" CAL.	12`-14` HT.	65	SINGLE DOMINANT LEADER, UNIFORM CANOPY & MATCHED

1 PLANT SCHEDULE — SCALE: NTS

REV.NO.	DESCRIPTIONS	DATE
	REVISIONS	

SEAL

SEAL
NORTH CAROLINA PROFESSIONAL SEAL 025503 ENGINEER RICHARD A. MOORE
5/27/2020

McKIM&CREED
243 North Front Street
Wilmington, North Carolina 28401
Phone: (910)343-1048, Fax: (910)251-8282
License: F-1222
www.mckimcreed.com

D·R·HORTON® DHI Listed NYSE America's Builder

SIDBURY FARMS

NEW HANOVER COUNTY, NORTH CAROLINA

LANDSCAPE DETAILS

DATE:	02/12/2020
MCE PROJ. #	4245-0012
DRAWN	RAS/JEB
DESIGNED	RAS/JEB
CHECKED	RAM
PROJ. MGR.	RAM

SCALE
HORIZONTAL: AS SHOWN
VERTICAL: --

M&C FILE NUMBER CL-501
DRAWING NUMBER 59

STATUS: TRC SUBMITTAL
REVISION

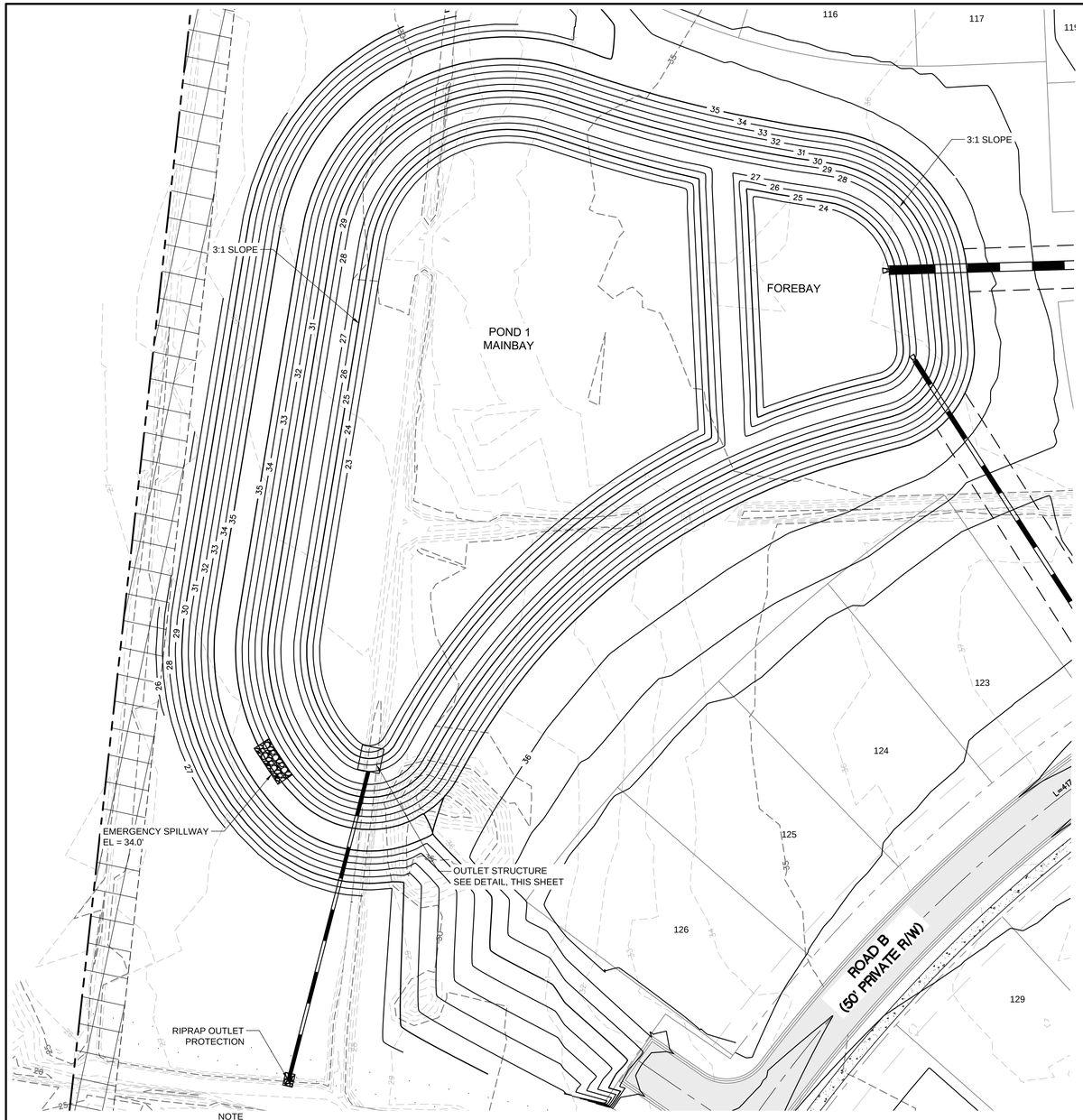

NOTE

SEE PLAN/PROFILE SHEETS FOR STORM DRAINAGE INFORMATION.

STORM ELEVATIONS
WET POND
1.5" DEPTH = 28.75'
DESIGN STORM
2-YEAR = 28.60'
10-YEAR = 29.62'
25-YEAR = 30.32'
50-YEAR = 31.01'
100-YEAR = 31.74'

N

30' 0 30' 60'

SCALE 1" = 30'

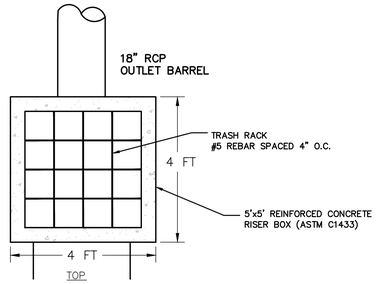

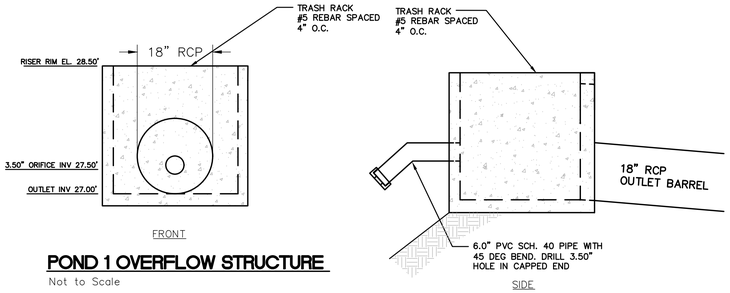

POND 1 OVERFLOW STRUCTURE

Not to Scale

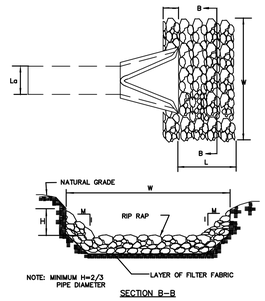

SECTION B–B

NOTES

1. SEE OUTLET PROTECTION TABLE BELOW FOR RIP–RAP DIMENSIONS AND CLASSES.
2. RIP–RAP SHOULD EXTEND UP BOTH SIDES OF THE APRON AND AROUND THE END OF THE PPIPE OR CULVERT AT THE DISCHARGE OUTLET AT A MAXIMUM SLOPE OF 2:1 AND A HEIGHT NOT LESS THAN TWO THIRDS THE PIPE DIAMETER OR CULVERT HEIGHT.
3. THERE SHALL BE NO OVERFLOW FROM THE END OF THE APRON TO THE SURFACE OF THE RECEIVING CHANNEL. THE AREA TO BE PAVED OR RIPRAPPED SHALL BE UNDERCUT SO THAT THE INVERT OF THE APRON SHALL BE AT THE SAME GRADE (FLUSH) WITH THE SURFACE OF THE RECEIVING CHANNEL. THE APRON SHALL HAVE A CUTOFF OR TOE WALL AT THE DOWNSTREAM END.
4. THE WIDTH OF THE END OF THE APRON SHALL BE EQUAL TO THE BOTTOM WIDTH OF THE RECEIVING CHANNEL. MAXIMUM TAPER TO RECEIVING CHANNEL 5:1
5. ALL SUBGRADE FOR STRUCTURE TO BE COMPACTED TO 95% OR GREATER.
6. THE PLACING OF FILL, EITHER LOOSE OR COMPACTED IN THE RECEIVING CHANNEL SHALL NOT BE ALLOWED.
7. NO BENDS OR CURVES IN THE HORIZONTAL ALIGNMENT OF THE APRON WILL BE PERMITTED.

RIP RAP APRON OUTLETS

NOT TO SCALE

OUTLET					RIPRAP			APRON		
NUMBER	DIA (in)	Q (cfs)	V (fps)	ZONE	D50 (in)	CLASS	Dmax (in)	THICKNESS (in)	LENGTH (ft)	WIDTH (ft)
POND #1	18	9.65	5.46	1	10	1	6	9	6	4.5

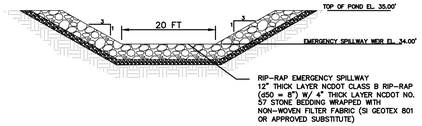

EMERGENCY SPILLWAY SECTION

Not to Scale

POND 1 DETAIL

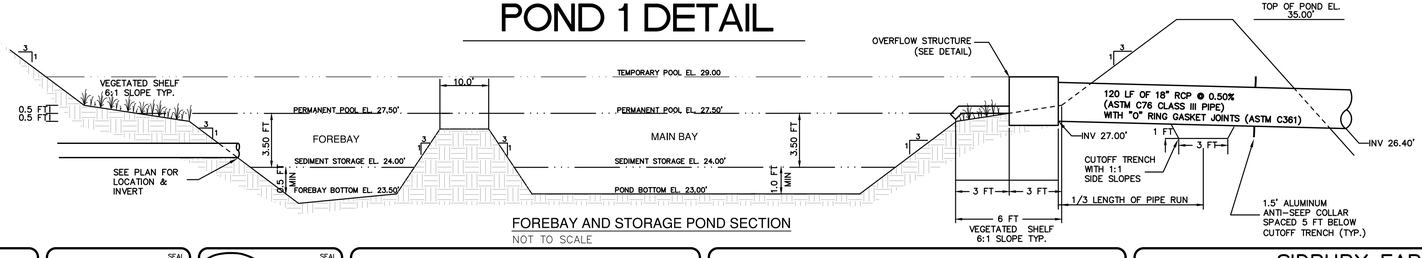

FOREBAY AND STORAGE POND SECTION

NOT TO SCALE

WET DETENTION POND NOTES

1) TEMPORARY PUMP WILL BE PROVIDED BY OWNER TO DRAIN POND/FOREBAY FOR ROUTINE MAINTENANCE OR IN AN EMERGENCY.
2) CONTRACTOR SHALL INSTALL EQUAL NUMBERS OF THE LISTED SUITABLE SPECIES FOR THE VEGETATED SHELF. GROUP SIMILAR SPECIES OF PLANTS TOGETHER, INSTALL PLANTS 24" O.C. IN A CHECKERBOARD PATTERN, AND NO PLANTS SHALL BE PLANTED WITHIN 10 FT OF THE OUTLET STRUCTURE. LISTED SUITABLE SPECIES FOR VEGETATED SHELF ARE: **ARROW ARUM, BLUE FLAG IRIS, CANA LILY, AND PICKEREL WEED.**
3) SOD SLOPES ABOVE THE PERMANENT POOL, AROUND THE INSIDE OF THE FOREBAY, ABOVE THE VEGETATED SHELF AROUND THE MAIN BAY AND SLOPES OUTSIDE OF THE POND.
4) CONTRACTOR SHALL EXCAVATE VEGETATED SHELF AS NECESSARY TO PROVIDE ADEQUATE CLEARANCE AROUND RISER FOR PVC PIPE INVERT.
5) THE SEASONAL HIGH WATER TABLE WAS FOUND TO BE ~ EL. 28.1 IN THE VICINITY OF THE WET DETENTION POND

REV.NO.	DESCRIPTIONS	DATE
	REVISIONS	

SEAL

SEAL
NORTH CAROLINA PROFESSIONAL ENGINEER SEAL 025503 RICHARD A. MOORE
5/27/2020

McKIM&CREED
243 North Front Street
Wilmington, North Carolina 28401
Phone: (910)343–1048, Fax: (910)251–8282
License: F–1222
www.mckimcreed.com

D·R·HORTON® DHI Listed NYSE
America's Builder

SIDBURY FARMS

NEW HANOVER COUNTY, NORTH CAROLINA

STORMWATER POND 1 DETAILS

DATE:	02/12/2020
MCE PROJ. #	4245–0012
DRAWN	RAS/JEB
DESIGNED	RAS/JEB
CHECKED	RAM
PROJ. MGR.	RAM

SCALE
HORIZONTAL: 1"=30'
VERTICAL: N/A

M&C FILE NUMBER CN-501
DRAWING NUMBER 60

STATUS: TRC SUBMITTAL REVISION

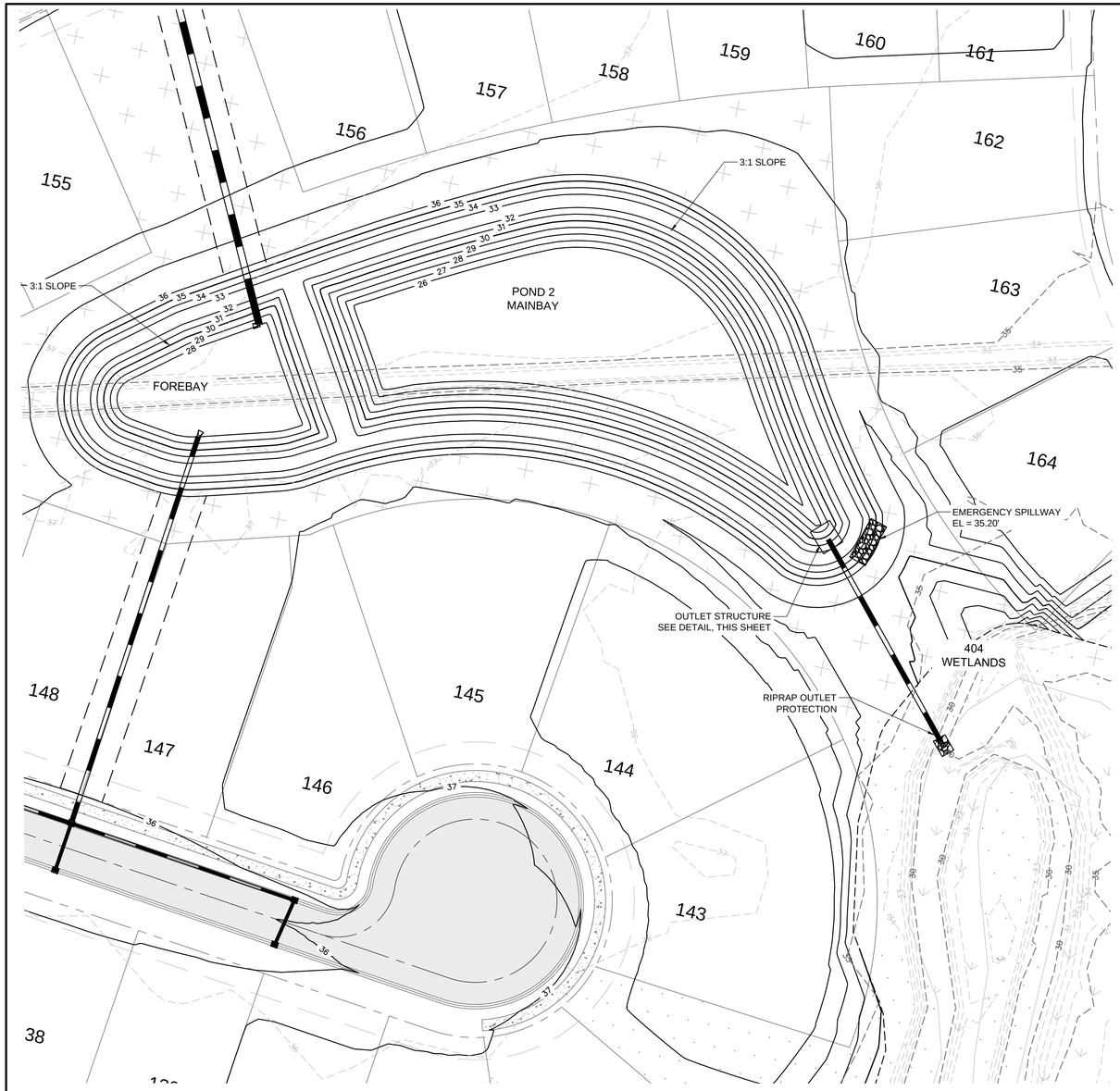

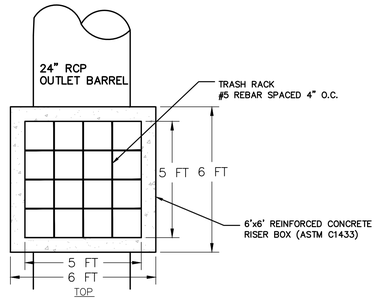

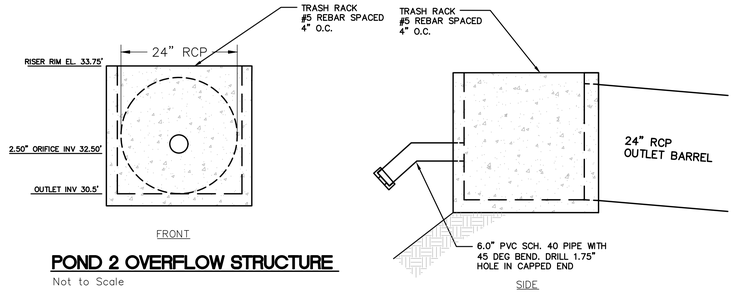

POND 2 OVERFLOW STRUCTURE

Not to Scale

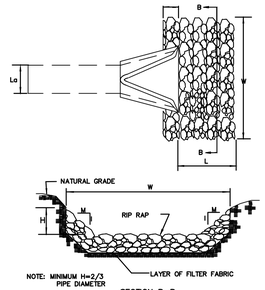

SECTION B-B

NOTES

1. SEE OUTLET PROTECTION TABLE BELOW FOR RIP-RAP DIMENSIONS AND CLASSES.
2. RIP-RAP SHOULD EXTEND UP BOTH SIDES OF THE APRON AND AROUND THE END OF THE PPIPE OR CULVERT AT THE DISCHARGE OUTLET AT A MAXIMUM SLOPE OF 2:1 AND A HEIGHT NOT LESS THAN TWO THIRDS THE PIPE DIAMETER OR CULVERT HEIGHT.
3. THERE SHALL BE NO OVERFLOW FROM THE END OF THE APRON TO THE SURFACE OF THE RECEIVING CHANNEL. THE AREA TO BE PAVED OR RIPRAPPED SHALL BE UNDERCUT SO THAT THE INVERT OF THE APRON SHALL BE AT THE SAME GRADE (FLUSH) WITH THE SURFACE OF THE RECEIVING CHANNEL. THE APRON SHALL HAVE A CUTOFF OR TOE WALL AT THE DOWNSTREAM END.
4. THE WIDTH OF THE END OF THE APRON SHALL BE EQUAL TO THE BOTTOM WIDTH OF THE RECEIVING CHANNEL. MAXIMUM TAPER TO RECEIVING CHANNEL 5:1
5. ALL SUBGRADE FOR STRUCTURE TO BE COMPACTED TO 95% OR GREATER.
6. THE PLACING OF FILL, EITHER LOOSE OR COMPACTED IN THE RECEIVING CHANNEL SHALL NOT BE ALLOWED.
7. NO BENDS OR CURVES IN THE HORIZONTAL ALIGNMENT OF THE APRON WILL BE PERMITTED.

RIP RAP APRON OUTLETS

NOT TO SCALE

OUTLET					RIPRAP			APRON		
NUMBER	DIA (in)	Q (cfs)	V (fps)	ZONE	D50 (in)	CLASS	Dmax (in)	THICKNESS (in)	LENGTH (ft)	WIDTH (ft)
POND #2	24	14.74	4.69	1	10	1	6	9	8	6

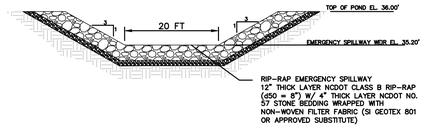

EMERGENCY SPILLWAY SECTION

Not to Scale

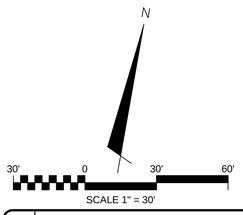

NOTE

SEE PLAN/PROFILE SHEETS FOR STORM DRAINAGE INFORMATION.

STORM ELEVATIONS
WET POND
1.5" DEPTH = 33.74'
DESIGN STORM
2-YEAR = 33.76'
10-YEAR = 34.11'
25-YEAR = 34.30'
50-YEAR = 34.70'
100-YEAR = 35.13'

POND 2 DETAIL

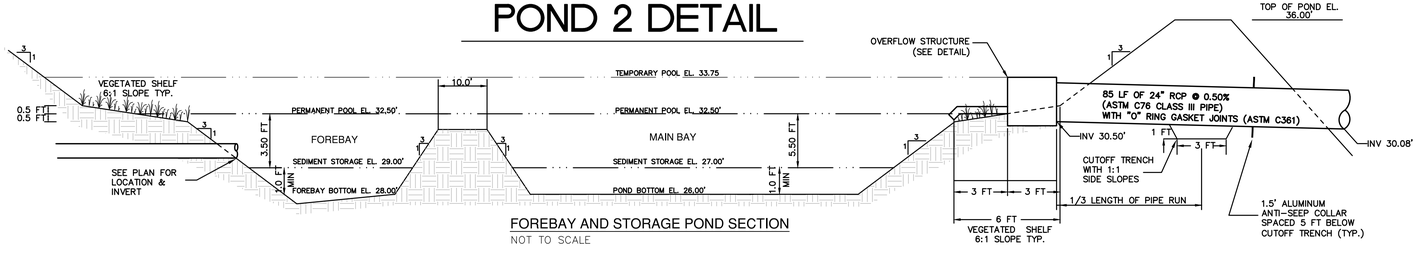

FOREBAY AND STORAGE POND SECTION

NOT TO SCALE

WET DETENTION POND NOTES

1) TEMPORARY PUMP WILL BE PROVIDED BY OWNER TO DRAIN POND/FOREBAY FOR ROUTINE MAINTENANCE OR IN AN EMERGENCY.
2) CONTRACTOR SHALL INSTALL EQUAL NUMBERS OF THE LISTED SUITABLE SPECIES FOR THE VEGETATED SHELF. GROUP SIMILAR SPECIES OF PLANTS TOGETHER, INSTALL PLANTS 24" O.C. IN A CHECKERBOARD PATTERN, AND NO PLANTS SHALL BE PLANTED WITHIN 10 FT OF THE OUTLET STRUCTURE. LISTED SUITABLE SPECIES FOR VEGETATED SHELF ARE: **ARROW ARUM, BLUE FLAG IRIS, CANA LILY, AND PICKEREL WEED.**
3) SOD SLOPES ABOVE THE PERMANENT POOL, AROUND THE INSIDE OF THE FOREBAY, ABOVE THE VEGETATED SHELF AROUND THE MAIN BAY AND SLOPES OUTSIDE OF THE POND.
4) CONTRACTOR SHALL EXCAVATE VEGETATED SHELF AS NECESSARY TO PROVIDE ADEQUATE CLEARANCE AROUND RISER FOR PVC PIPE INVERT.
5) THE SEASONAL HIGH WATER TABLE WAS FOUND TO BE ~ EL. 33.00 IN THE VICINITY OF THE WET DETENTION POND

REV.NO.	DESCRIPTIONS	DATE
	REVISIONS	

SEAL

SEAL

NORTH CAROLINA PROFESSIONAL ENGINEER SEAL 025503 RICHARD A. MOORE
5/27/2020

McKIM&CREED
243 North Front Street
Wilmington, North Carolina 28401
Phone: (910)343-1048, Fax: (910)251-8282
License: F-1222
www.mckimcreed.com

D·R·HORTON® DHI Listed NYSE
America's Builder

SIDBURY FARMS

NEW HANOVER COUNTY, NORTH CAROLINA

STORMWATER POND 2 DETAILS

DATE:	02/12/2020
MCE PROJ. #	4245-0012
DRAWN	RAS/JEB
DESIGNED	RAS/JEB
CHECKED	RAM
PROJ. MGR.	RAM

SCALE
HORIZONTAL: 1"=30'
VERTICAL: N/A

M&C FILE NUMBER
CN-502
DRAWING NUMBER
61

STATUS: TRC SUBMITTAL
REVISION

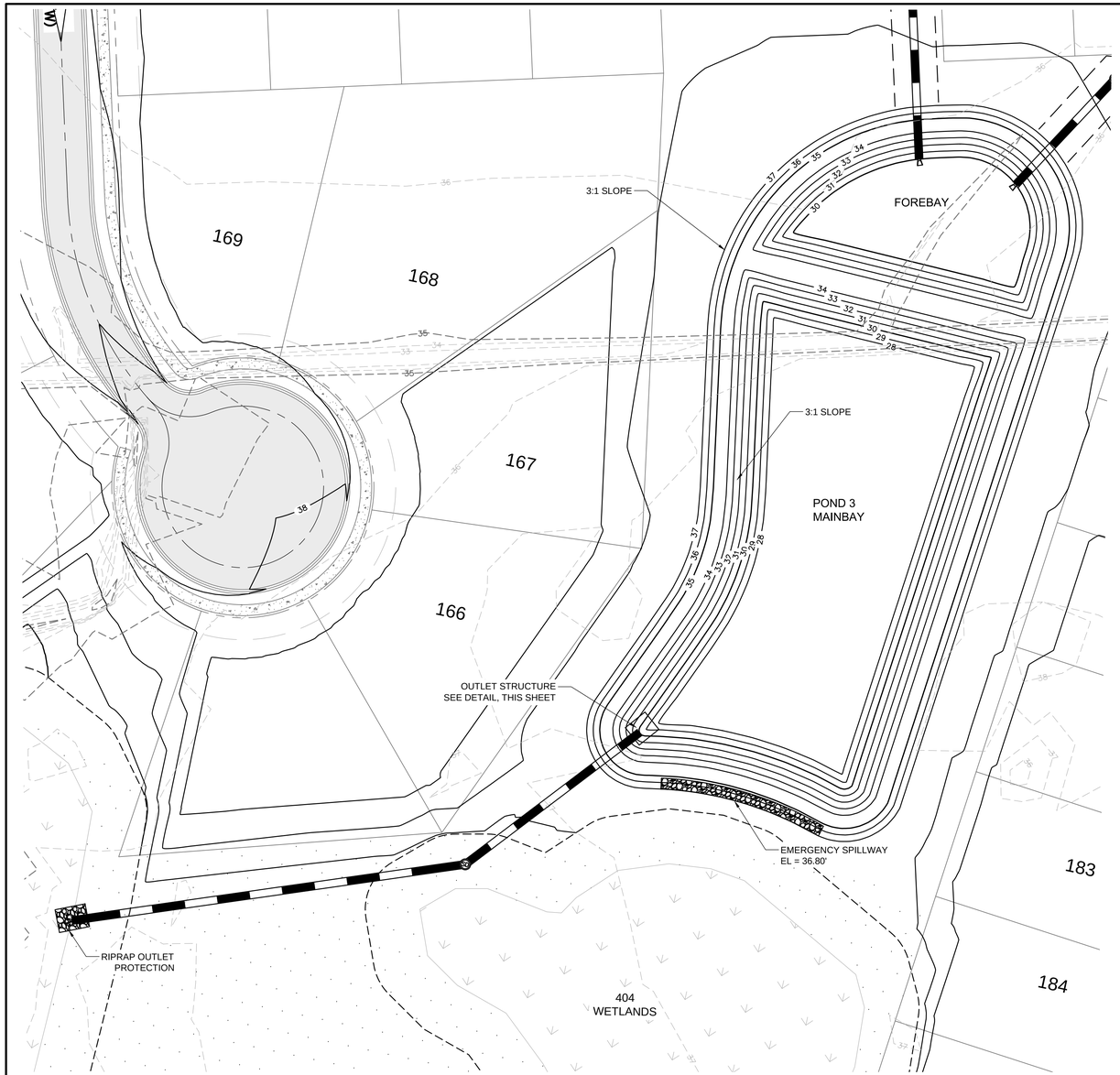

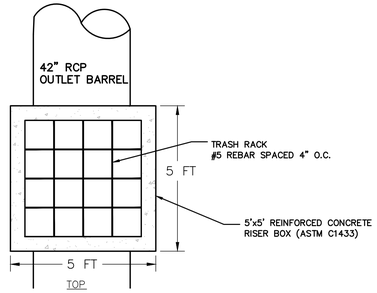

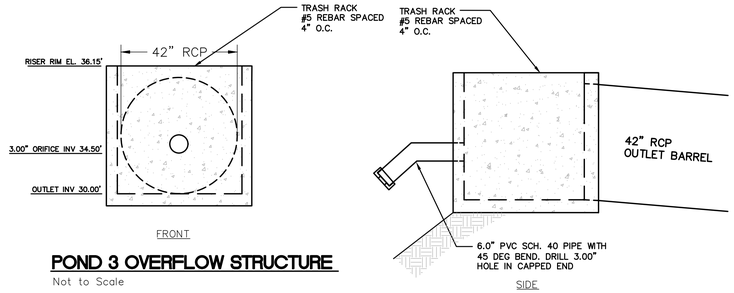

POND 3 OVERFLOW STRUCTURE

Not to Scale

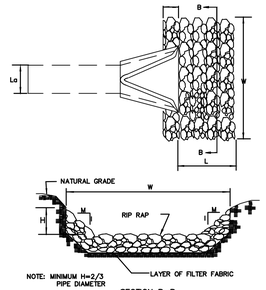

SECTION B-B

NOTES

1. SEE OUTLET PROTECTION TABLE BELOW FOR RIP-RAP DIMENSIONS AND CLASSES.
2. RIP-RAP SHOULD EXTEND UP BOTH SIDES OF THE APRON AND AROUND THE END OF THE PPIPE OR CULVERT AT THE DISCHARGE OUTLET AT A MAXIMUM SLOPE OF 2:1 AND A HEIGHT NOT LESS THAN TWO THIRDS THE PIPE DIAMETER OR CULVERT HEIGHT.
3. THERE SHALL BE NO OVERFLOW FROM THE END OF THE APRON TO THE SURFACE OF THE RECEIVING CHANNEL. THE AREA TO BE PAVED OR RIPRAPPED SHALL BE UNDERCUT SO THAT THE INVERT OF THE APRON SHALL BE AT THE SAME GRADE (FLUSH) WITH THE SURFACE OF THE RECEIVING CHANNEL. THE APRON SHALL HAVE A CUTOFF OR TOE WALL AT THE DOWNSTREAM END.
4. THE WIDTH OF THE END OF THE APRON SHALL BE EQUAL TO THE BOTTOM WIDTH OF THE RECEIVING CHANNEL. MAXIMUM TAPER TO RECEIVING CHANNEL 5:1
5. ALL SUBGRADE FOR STRUCTURE TO BE COMPACTED TO 95% OR GREATER.
6. THE PLACING OF FILL, EITHER LOOSE OR COMPACTED IN THE RECEIVING CHANNEL SHALL NOT BE ALLOWED.
7. NO BENDS OR CURVES IN THE HORIZONTAL ALIGNMENT OF THE APRON WILL BE PERMITTED.

RIP RAP APRON OUTLETS

NOT TO SCALE

OUTLET					RIPRAP			APRON		
NUMBER	DIA (in)	Q (cfs)	V (fps)	ZONE	D50 (in)	CLASS	Dmax (in)	THICKNESS (in)	LENGTH (ft)	WIDTH (ft)
POND #3	42	15.45	1.61	1	10	1	6	9	14	10.5

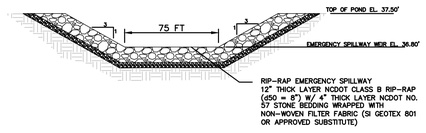

EMERGENCY SPILLWAY SECTION

Not to Scale

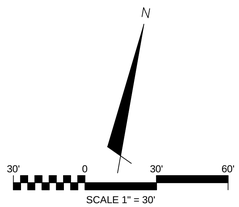

NOTE

SEE PLAN/PROFILE SHEETS FOR STORM DRAINAGE INFORMATION.

STORM ELEVATIONS
WET POND
1.5" DEPTH = 36.26'
DESIGN STORM
2-YEAR = 36.13'
10-YEAR = 36.52'
25-YEAR = 36.76'
50-YEAR = 36.92'
100-YEAR = 37.04'

POND 3 DETAIL

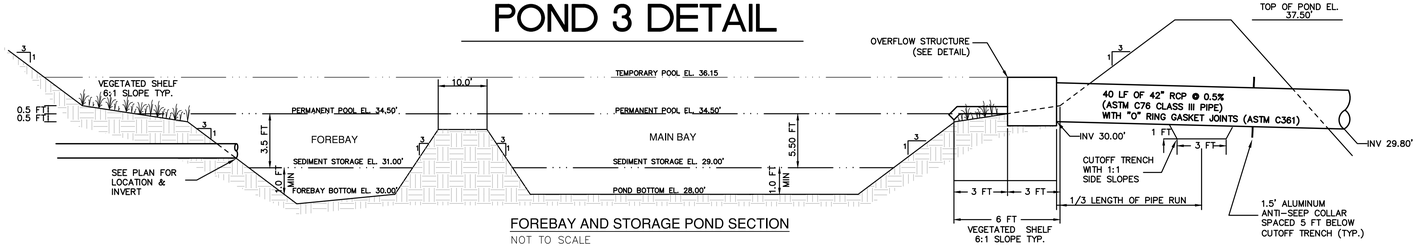

FOREBAY AND STORAGE POND SECTION

NOT TO SCALE

WET DETENTION POND NOTES

1) TEMPORARY PUMP WILL BE PROVIDED BY OWNER TO DRAIN POND/FOREBAY FOR ROUTINE MAINTENANCE OR IN AN EMERGENCY.
2) CONTRACTOR SHALL INSTALL EQUAL NUMBERS OF THE LISTED SUITABLE SPECIES FOR THE VEGETATED SHELF. GROUP SIMILAR SPECIES OF PLANTS TOGETHER, INSTALL PLANTS 24" O.C. IN A CHECKERBOARD PATTERN, AND NO PLANTS SHALL BE PLANTED WITHIN 10 FT OF THE OUTLET STRUCTURE. LISTED SUITABLE SPECIES FOR VEGETATED SHELF ARE: **ARROW ARUM, BLUE FLAG IRIS, CANA LILY, AND PICKEREL WEED.**
3) SOD SLOPES ABOVE THE PERMANENT POOL, AROUND THE INSIDE OF THE FOREBAY, ABOVE THE VEGETATED SHELF AROUND THE MAIN BAY AND SLOPES OUTSIDE OF THE POND.
4) CONTRACTOR SHALL EXCAVATE VEGETATED SHELF AS NECESSARY TO PROVIDE ADEQUATE CLEARANCE AROUND RISER FOR PVC PIPE INVERT.
5) THE SEASONAL HIGH WATER TABLE WAS FOUND TO BE ~ EL. 35.00 IN THE VICINITY OF THE WET DETENTION POND

REV.NO.	DESCRIPTIONS	DATE
	REVISIONS	

SEAL

SEAL

NORTH CAROLINA PROFESSIONAL ENGINEER SEAL 025503 RICHARD A. MOORE 5/27/2020

McKIM&CREED
243 North Front Street
Wilmington, North Carolina 28401
Phone: (910)343-1048, Fax: (910)251-8282
License: F-1222
www.mckimcreed.com

D·R·HORTON® DHI Listed NYSE America's Builder

SIDBURY FARMS

NEW HANOVER COUNTY, NORTH CAROLINA

STORMWATER POND 3 DETAILS

DATE:	02/12/2020
MCE PROJ. #	4245-0012
DRAWN	RAS/JEB
DESIGNED	RAS/JEB
CHECKED	RAM
PROJ. MGR.	RAM

SCALE
HORIZONTAL: 1"=30'
VERTICAL: N/A

M&C FILE NUMBER
CN-503
DRAWING NUMBER
62

STATUS: TRC SUBMITTAL
REVISION

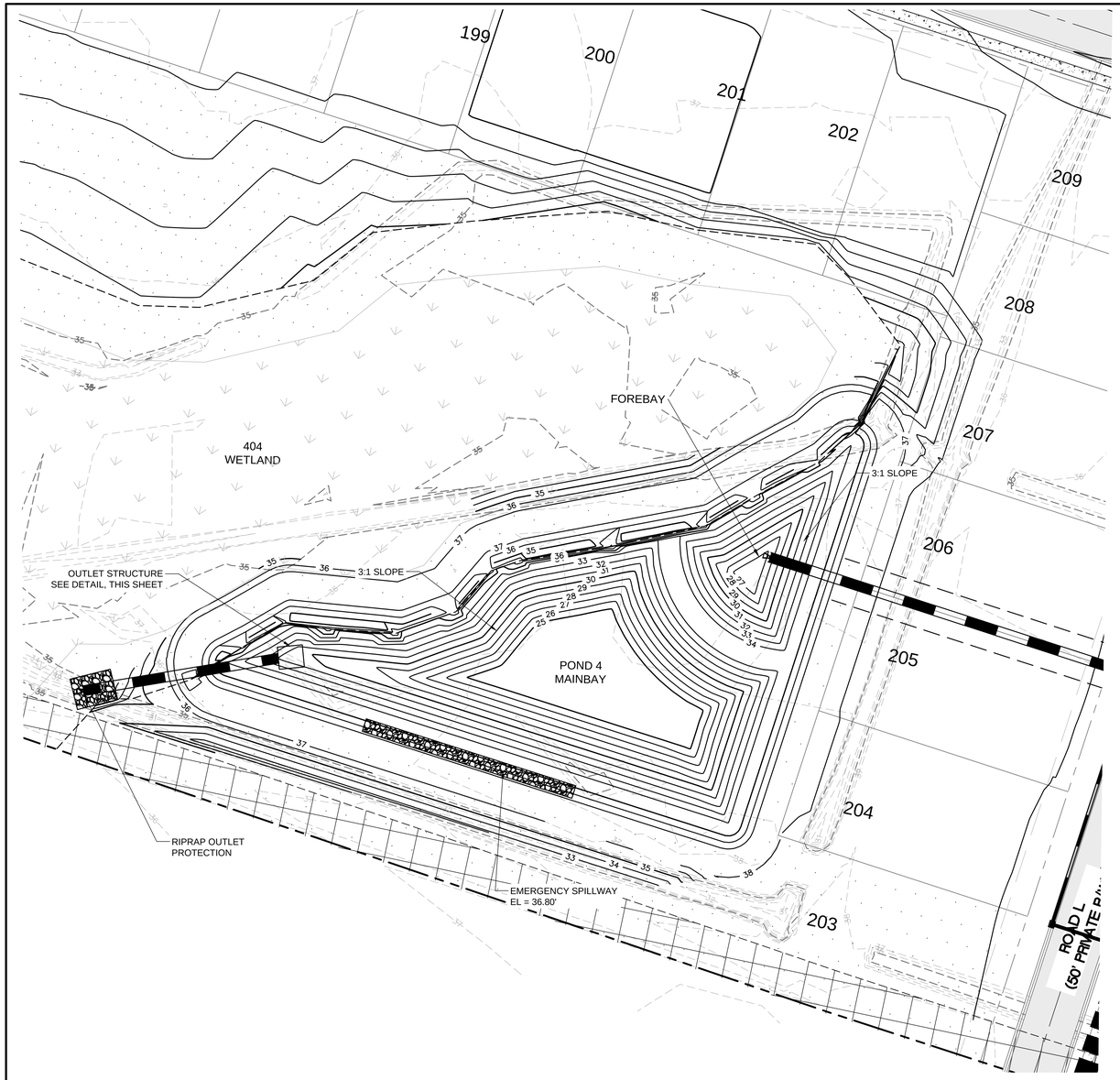

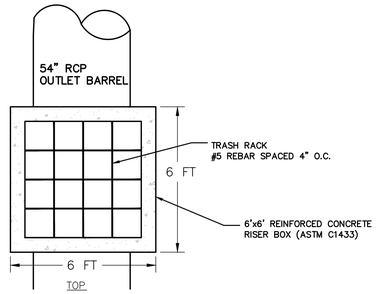

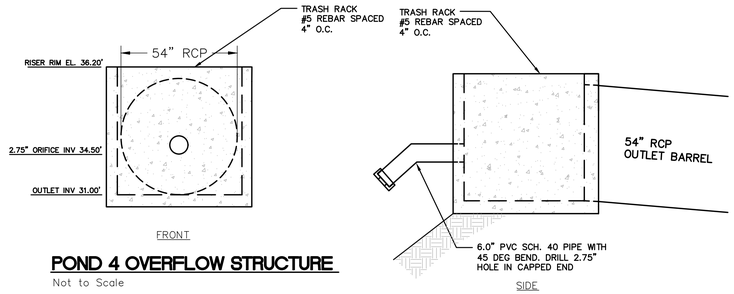

POND 4 OVERFLOW STRUCTURE

Not to Scale

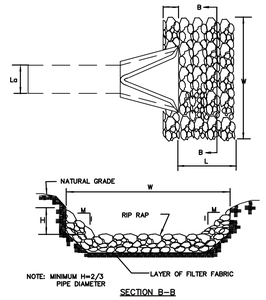

SECTION B-B

NOTES

1. SEE OUTLET PROTECTION TABLE BELOW FOR RIP-RAP DIMENSIONS AND CLASSES.
2. RIP-RAP SHOULD EXTEND UP BOTH SIDES OF THE APRON AND AROUND THE END OF THE PPIPE OR CULVERT AT THE DISCHARGE OUTLET AT A MAXIMUM SLOPE OF 2:1 AND A HEIGHT NOT LESS THAN TWO THIRDS THE PIPE DIAMETER OR CULVERT HEIGHT.
3. THERE SHALL BE NO OVERFLOW FROM THE END OF THE APRON TO THE SURFACE OF THE RECEIVING CHANNEL. THE AREA TO BE PAVED OR RIPRAPPED SHALL BE UNDERCUT SO THAT THE INVERT OF THE APRON SHALL BE AT THE SAME GRADE (FLUSH) WITH THE SURFACE OF THE RECEIVING CHANNEL. THE APRON SHALL HAVE A CUTOFF OR TOE WALL AT THE DOWNSTREAM END.
4. THE WIDTH OF THE END OF THE APRON SHALL BE EQUAL TO THE BOTTOM WIDTH OF THE RECEIVING CHANNEL. MAXIMUM TAPER TO RECEIVING CHANNEL 5:1
5. ALL SUBGRADE FOR STRUCTURE TO BE COMPACTED TO 95% OR GREATER.
6. THE PLACING OF FILL, EITHER LOOSE OR COMPACTED IN THE RECEIVING CHANNEL SHALL NOT BE ALLOWED.
7. NO BENDS OR CURVES IN THE HORIZONTAL ALIGNMENT OF THE APRON WILL BE PERMITTED.

RIP RAP APRON OUTLETS

NOT TO SCALE

OUTLET					RIPRAP			APRON		
NUMBER	DIA (in)	Q (cfs)	V (fps)	ZONE	D50 (in)	CLASS	Dmax (in)	THICKNESS (in)	LENGTH (ft)	WIDTH (ft)
POND #4	54	23.06	1.3	2	10	1	12	18	28.5	14.3

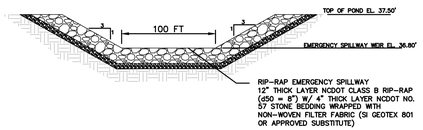

EMERGENCY SPILLWAY SECTION

Not to Scale

POND 4 DETAIL

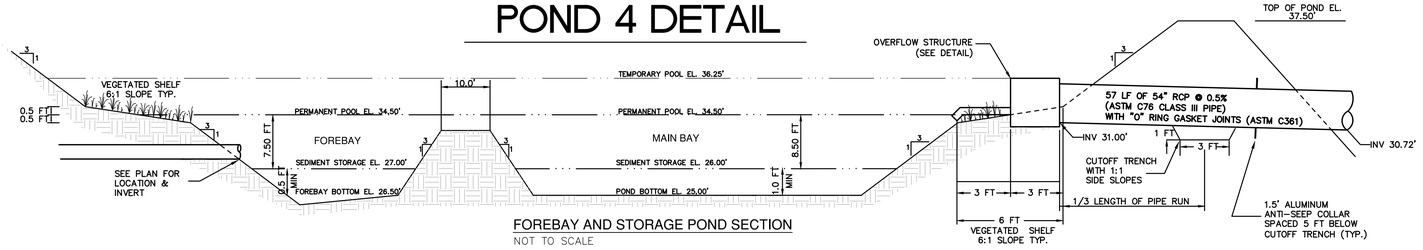

FOREBAY AND STORAGE POND SECTION

NOT TO SCALE

WET DETENTION POND NOTES

1) TEMPORARY PUMP WILL BE PROVIDED BY OWNER TO DRAIN POND/FOREBAY FOR ROUTINE MAINTENANCE OR IN AN EMERGENCY.
2) CONTRACTOR SHALL INSTALL EQUAL NUMBERS OF THE LISTED SUITABLE SPECIES FOR THE VEGETATED SHELF. GROUP SIMILAR SPECIES OF PLANTS TOGETHER, INSTALL PLANTS 24" O.C. IN A CHECKERBOARD PATTERN, AND NO PLANTS SHALL BE PLANTED WITHIN 10 FT OF THE OUTLET STRUCTURE. LISTED SUITABLE SPECIES FOR VEGETATED SHELF ARE: **ARROW ARUM, BLUE FLAG IRIS, CANA LILY, AND PICKEREL WEED.**
3) SOD SLOPES ABOVE THE PERMANENT POOL, AROUND THE INSIDE OF THE FOREBAY, ABOVE THE VEGETATED SHELF AROUND THE MAIN BAY AND SLOPES OUTSIDE OF THE POND.
4) CONTRACTOR SHALL EXCAVATE VEGETATED SHELF AS NECESSARY TO PROVIDE ADEQUATE CLEARANCE AROUND RISER FOR PVC PIPE INVERT.
5) THE SEASONAL HIGH WATER TABLE WAS FOUND TO BE ~ EL. 35.00 IN THE VICINITY OF THE WET DETENTION POND

NOTE

SEE PLAN/PROFILE SHEETS FOR STORM DRAINAGE INFORMATION.

STORM ELEVATIONS
WET POND
1.5" DEPTH = 36.24'
DESIGN STORM
2-YEAR = 36.24'
10-YEAR = 36.63'
25-YEAR = 36.82'
50-YEAR = 36.92'
100-YEAR = 36.99'

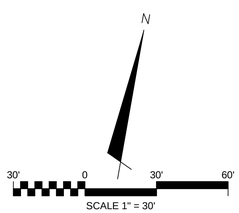

REV.NO.	DESCRIPTIONS	DATE
	REVISIONS	

SEAL

SEAL

NORTH CAROLINA PROFESSIONAL SEAL 025503 ENGINEER RICHARD A. MOORE 5/27/2020

McKIM&CREED
243 North Front Street
Wilmington, North Carolina 28401
Phone: (910)343-1048, Fax: (910)251-8282
License: F-1222
www.mckimcreed.com

D·R·HORTON® DHI Listed NYSE
America's Builder

SIDBURY FARMS

NEW HANOVER COUNTY, NORTH CAROLINA

STORMWATER POND 4 DETAILS

DATE:	02/12/2020
MCE PROJ. #	4245-0012
DRAWN	RAS/JEB
DESIGNED	RAS/JEB
CHECKED	RAM
PROJ. MGR.	RAM

SCALE
HORIZONTAL: 1"=30'
VERTICAL: N/A

M&C FILE NUMBER
CN-504
DRAWING NUMBER
63

STATUS: TRC SUBMITTAL
REVISION